Order No: PCZ0510104C2

Service Manual

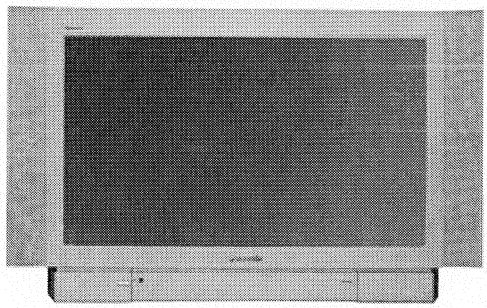

Colour Television

TX-32E50D
TX-32PS12D
TX-32PS12F
TX-32PS12P
CP-830FP Chassis

SPECIFICATIONS

Power Source: 220-240V a.c.,50Hz

Power Consumption: 94W

Stand-by Power Consumption: 1,5W

Aerial Impedance: 75Ω unbalanced, Coaxial Type

Receiving System: PAL-I, B/G, D/K, PAL-525/60
SECAM B/G, D/K, L,L'
M.NTSC (AV only)
NTSC (AV only)

Receiving Channels:

VHF E2-E12	VHF H1-H2(ITALY)
VHF A-H (ITALY)	VHF R1-R2
VHF R3-R5	VHF R6-R12
UHF E21-E69	CATV (S01-S05)
CATV S1-S10 (M1-M10)	CATV S11-S20 (U1-U10)
CATV S21-S41 (HYPERBAND)	

Intermediate Frequency:
Video/Audio

Video	38,9MHz, 33,9Mhz
Sound	33,4MHz (B/G), 33,16MHz (A2)
	33,05MHz (NICAM B/G,D/K,L)
	32,4MHz (D/K), 32,66MHz (CZ STEREO)
	40,4MHz (L'), 39,75MHz (L'NICAM)
Colour	34,47MHz (PAL)
	34,5MHz, 34,65MHz (SECAM)
	38,3MHz, 38,15MHz (SECAM L')

Terminals:

AV1 IN	Video (21pin)	1V p-p 75Ω
	Audio(21pin)	500mV rms 10kΩ
	RGB (21pin)	0,7V p-p 75Ω
AV1 OUT	Video (21pin)	1V p-p 75Ω
	Audio (21pin)	500mV rms 1kΩ
AV2 IN	Video (21pin)	1V p-p 75Ω
	Audio(21pin)	500mV rms 10kΩ
	S-Video IN (21pin)	Y: 1V p-p 75Ω
		C: 0,3V p-p 75Ω
AV2 OUT	Video (21pin)	1V p-p 75Ω
	Audio (21pin)	500mV rms 1kΩ
AV3 FRONT	Audio (RCAx2)	500mV rms 10kΩ
	Video (RCAx1)	1V p-p 75Ω
	S-Video IN	Y: 1V p-p 75Ω
		C: 0,3V p-p 75Ω

High Voltage: 29kV ± 1kV

Picture Tube: W76QEN693X17 76cm
W76MAF185X72 76cm - (TX-32PS12P)

Audio Output: 2x7W RMS, 2x14W MPO, 8Ω impedance

Headphones: 8Ω impedance

Accesories supplied: Remote Control
2xR6 (UM3) Batteries

Dimensions:

Height:	567 mm
Width:	902 mm
Depth:	551 mm
Net weight:	53 kg (TX-32PS12P = 51 kg)

Specifications are subject to change without notice.
Weights and dimensions shown are approximate.

Panasonic

CONTENTS

SAFETY PRECAUTION

GENERAL GUIDE LINES

1. It is advisable to insert an isolation transformer in the a.c. supply before servicing a hot chassis.
2. When servicing, observe the original lead dress in the high voltage circuits. If a short circuit is found, replace all parts that have been overheated or damaged by the short circuit.
3. After servicing, see that all the protective devices such as insulation barriers, insulation papers, shields and isolation R-C combinations are correctly installed.
4. When the receiver is not being used for a long period of time, unplug the power cord from the a.c. outlet.
5. Potentials as high as 30kV are present when this receiver is in operation. Operation of the receiver without the rear cover involves the danger of a shock hazard from the receiver power supply. Servicing should not be attempted by anyone who is not familiar with the precautions necessary when working on high voltage equipment. Always discharge the anode of the tube.
6. After servicing make the following leakage current checks to prevent the customer from being exposed to shock hazard.

LEAKAGE CURRENT COLD CHECK

1. Unplug the a.c. cord and connect a jumper between the two prongs of the plug.
2. Turn on the receiver's power switch.
3. Measure the resistance value with an ohmmeter, between the jumpered a.c. plug and each exposed metallic cabinet part on the receiver, such as screw heads, aerials, connectors, control shafts etc. When the exposed metallic part has a return path to the chassis, the reading should be between 4M ohm and 20M ohm. When the exposed metal does not have a return path to the chassis, the reading must be infinite.

LEAKAGE CURRENT HOT CHECK

1. Plug the a.c. cord directly into the a.c. outlet. Do not use an isolation transformer for this check.
2. Connect a 2kΩ 10W resistor in series with an exposed metallic part on the receiver and an earth, such as a water pipe.
3. Use an a.c. voltmeter with high impedance to measure the potential across the resistor.
4. Check each exposed metallic part and check the voltage at each point.
5. Reverse the a.c. plug at the outlet and repeat each of the previous measurements.
6. The potential at any point should not exceed 1,4 Vrms. In case a measurement is outside the limits specified, there is a possibility of a shock hazard, and the receiver should be repaired and rechecked before it is returned to the customer.

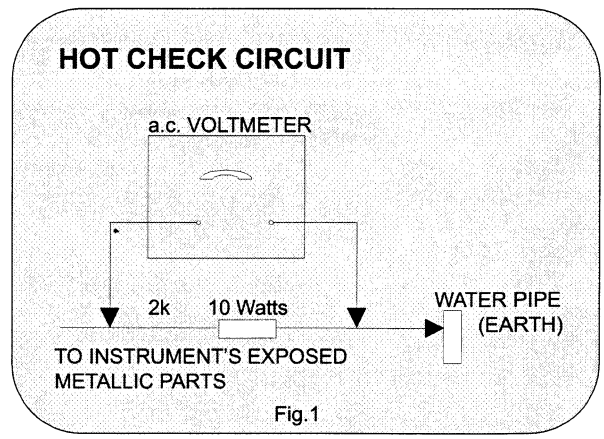

Fig.1

X-RADIATION WARNING

1. The potential sources of X-Radiation in TV sets are the high voltage section and the picture tube.
2. When using a picture tube test jig for service, ensure that the jig is capable of handling 30kV without causing X-Radiation.

NOTE: It is important to use an accurate periodically calibrated high voltage meter.

1. Set the brightness to minimum.
2. Measure the high voltage. The meter should indicate: 29kV ± 1kV.
   If the meter indication is out of tolerance, immediate service and correction is required to prevent the possibility of premature component failure.
3. To prevent any X-Radiation possibility, it is essential to use the specified tube.

SERVICE HINTS

How to remove the rear cover

1. Remove the 11 screws as shown in Fig. 2.

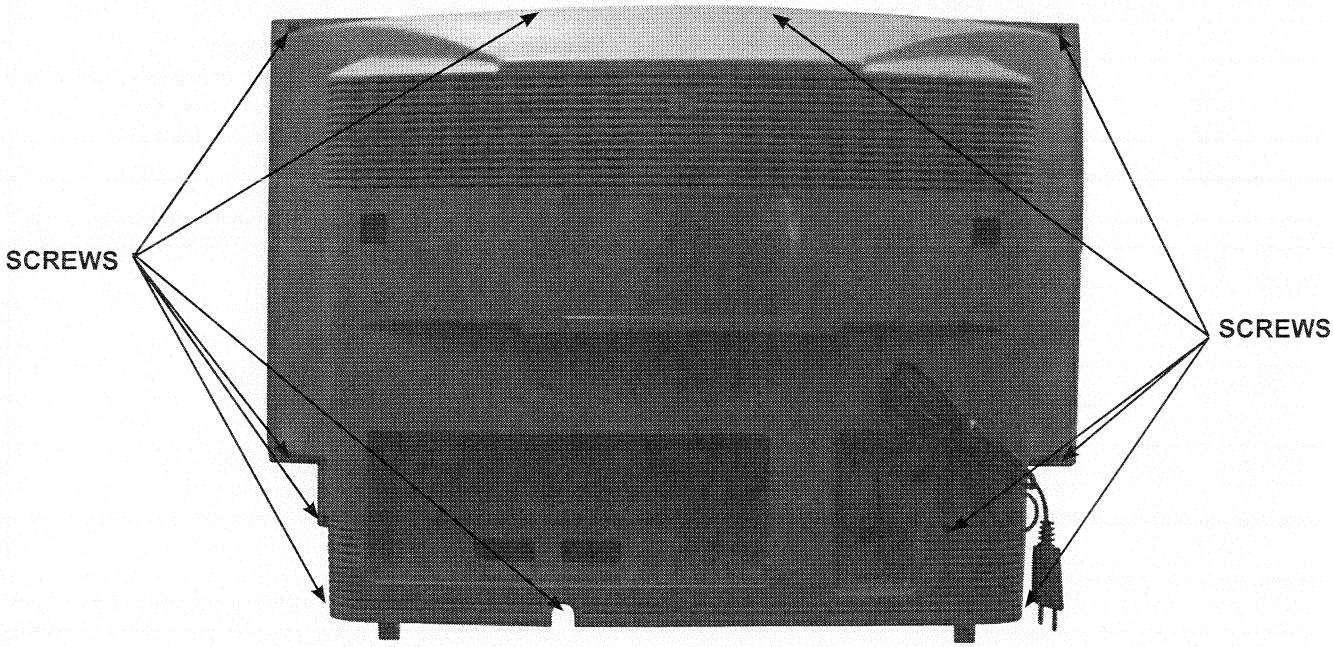

Fig. 2

LOCATION OF CONTROLS

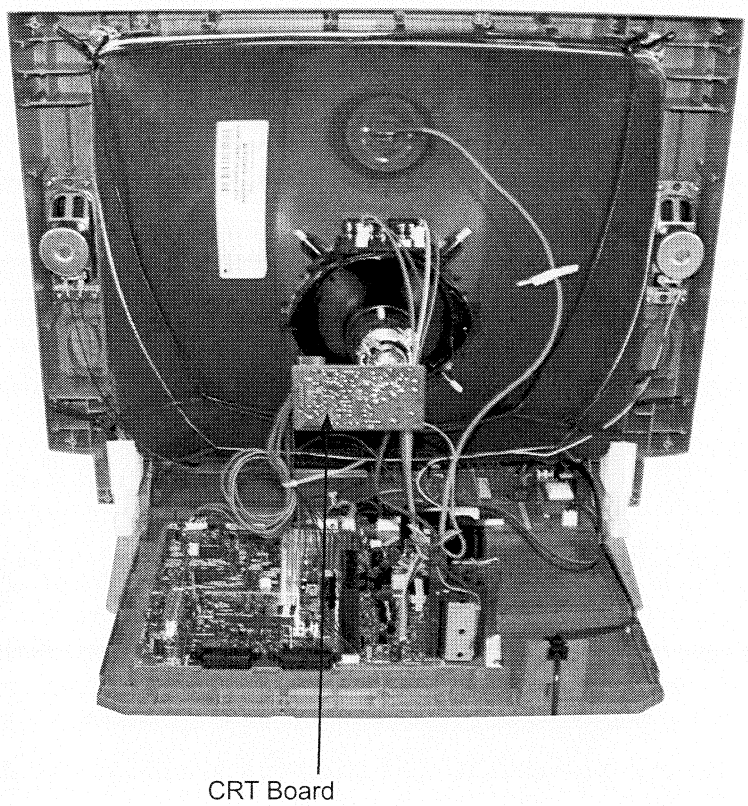

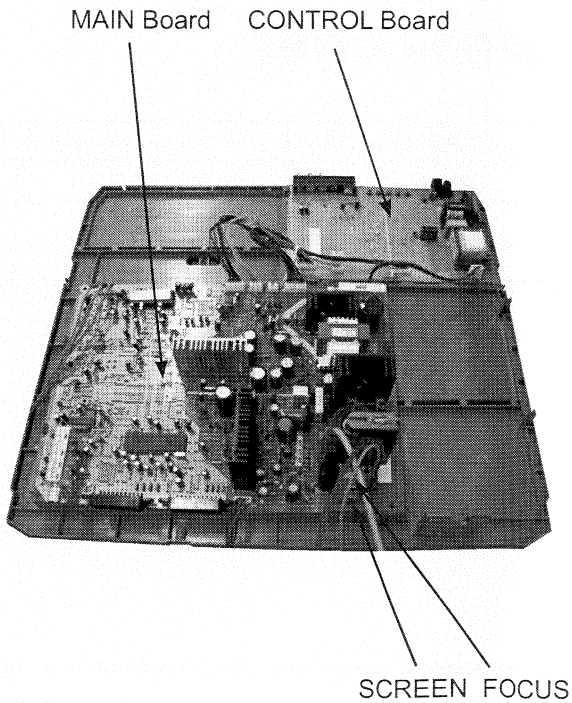

Fig. 3

VOLTAGE CHECK

SMT	2094.0074*			
MAIN B+ Voltage [V]	129,5	± 1 V	D820	test conditions ; Input voltage : 230VAC TV set on ON mode (if nothing specified) Picture : colour bar - Dynamic Sound : 1Khz - (mode : Music)
14V [V]	13	± 0,5 V	D831	
8V [V]	7,4	± 0,5 V	D830	
5V [V]	4,6	± 0,5 V	D870	
SOUND B+ [V]	13,2	± 0,5 V	*Volume Min.	
	12,8	± 0,5 V	*Volume Max.	

FBT	1302.2002*			
High Voltage [V]	27,85	± 0,5 kV	load Max.	test conditions ; Input voltage : 230VAC Ct = 11nF Cs = 0,3uF L linearity: TRL-5R0D CRT : W76QEN693X172
	29,20	± 0,5 kV	load Min.	
Retrace time	5,40	± 0,2 us		
Vcp [V]	1210	± 20 V		
Video Voltage [V]	180	± 5%		
14V line [V]	14	± 5%		
52V line [V]	52	± 5%		
Heater Voltage [Vrms]	6,2	± 5%		

G2 SCREEN / CUTOFF	
1. Receive a Color bar pattern 2. set the TV into Service mode. 3. Select G2 SCREEN item.	Adjust the screen VR till G2-SCREEN get 32(31~33).

OPTION BYTES

MODEL	OPTION BYTE 1		OPTION BYTE 2	
TX-32E50D	1 0 0 1 1 0 0 0	0 x 98	0 1 1 1 1 0 1 1	0 x 7B
TX-32PS12D	1 0 0 1 1 0 0 0	0 x 98	0 1 1 1 1 0 1 1	0 x 7B
TX-32PS12F	0 0 0 1 1 0 0 0	0 x 18	0 1 1 1 1 0 1 1	0 x 7B
TX-32PS12P	0 0 0 1 1 0 0 0	0 x 18	0 1 1 1 1 0 1 1	0 x 7B

WAVEFORM PATTERN TABLE

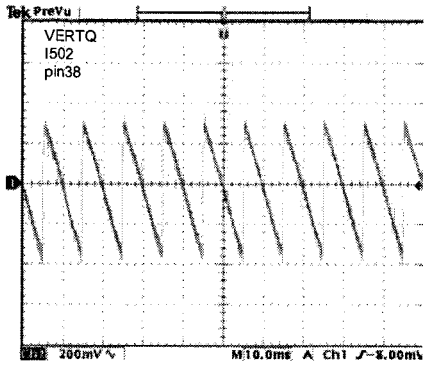

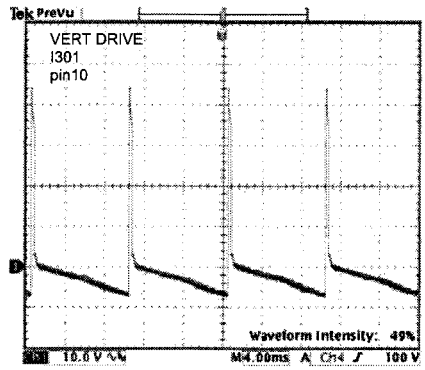

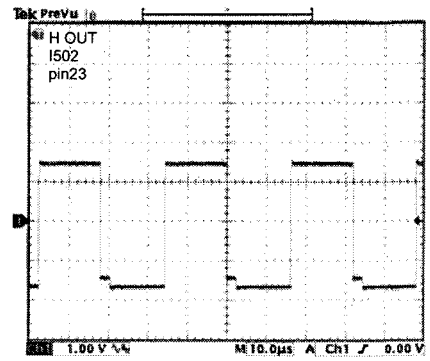

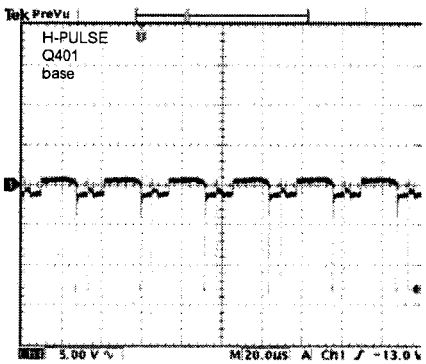

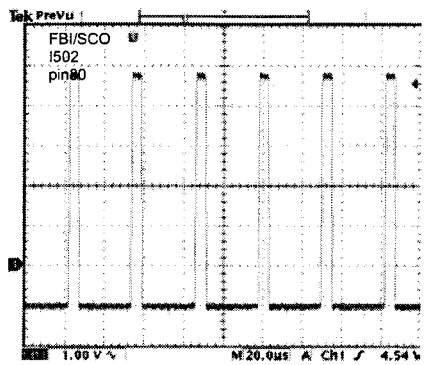

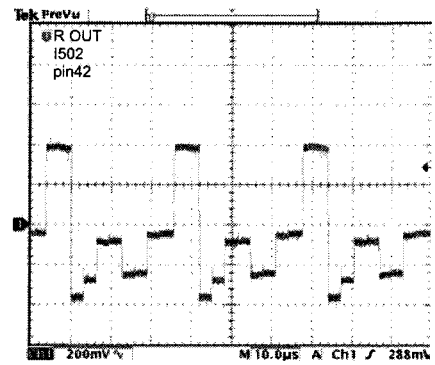

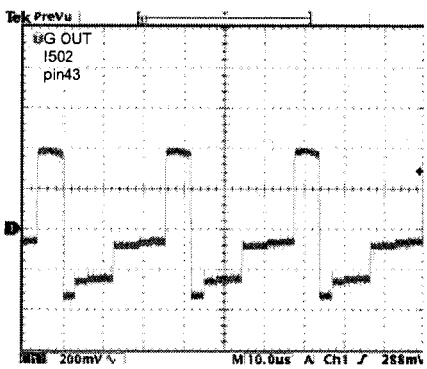

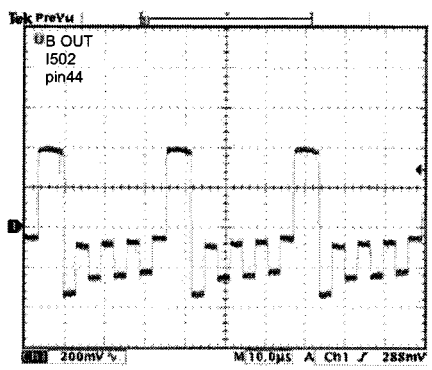

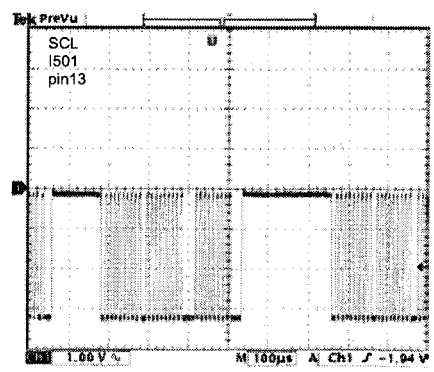

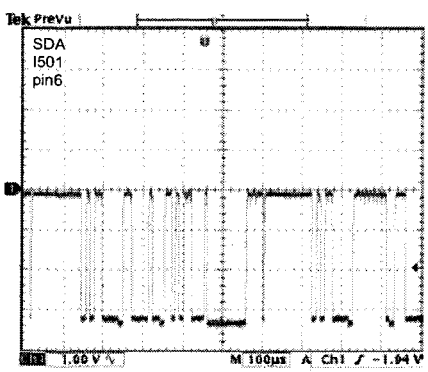

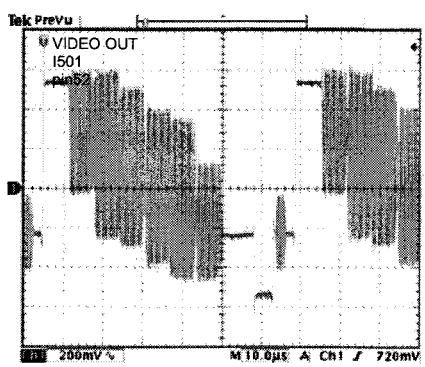

CONDITIONS: Contrast: MAX, Brightness: MID, Colour: MID, Sharpness: MID

ALIGNMENT SETTINGS

(The figures below are nominal and used for representative purposes only.)
To access Service Mode select program position 99 and set sharpness to minimum.
Press "**MUTE**" button on remote control and at the same time press the „V" button on the customer controls at the front of the TV, this will place the TV set into Service Mode.
Press Λ/V buttons to step up / down through the functions.
Press **+ / -** buttons to alter the function values.
To exit Service Mode press „MENU" button.

No	**Setting in indication** **Note :** All settings are approximate	**Settings / Special features**
1	PARABOLA	+ 196
2	HOR WIDTH	- 99
3	CORNER T	- 37
4	CORNER B	- 26
5	HOR PARAL	+ 7
6	V. LINEAR	- 1
7	EW-TRAPEZ	+ 35
8	S CORRECT	+ 80
9	VERT CENT	- 5
10	VERT SIZE	- 14
11	SHIPPING	OFF
12	HOR CEN	- 152
13	RED GAIN	+ 322
14	GRN GAIN	+ 308
15	BLUE GAIN	+ 330
16	RED BIAS	+ 121
17	GRN BIAS	+ 262
18	AGC LEVEL	+ 29
19	G2 SCREEN	+ 32
20	AFT	+ 32
21	Bit0 ~ Bit7	Refer to the Option Bytes(Page4)
22	Bit0 ~ Bit7	
23	Bit0 ~ Bit7	0 x FF
24	AVL	OFF

VIDEO & STEREO AUDIO BLOCK DIAGRAM

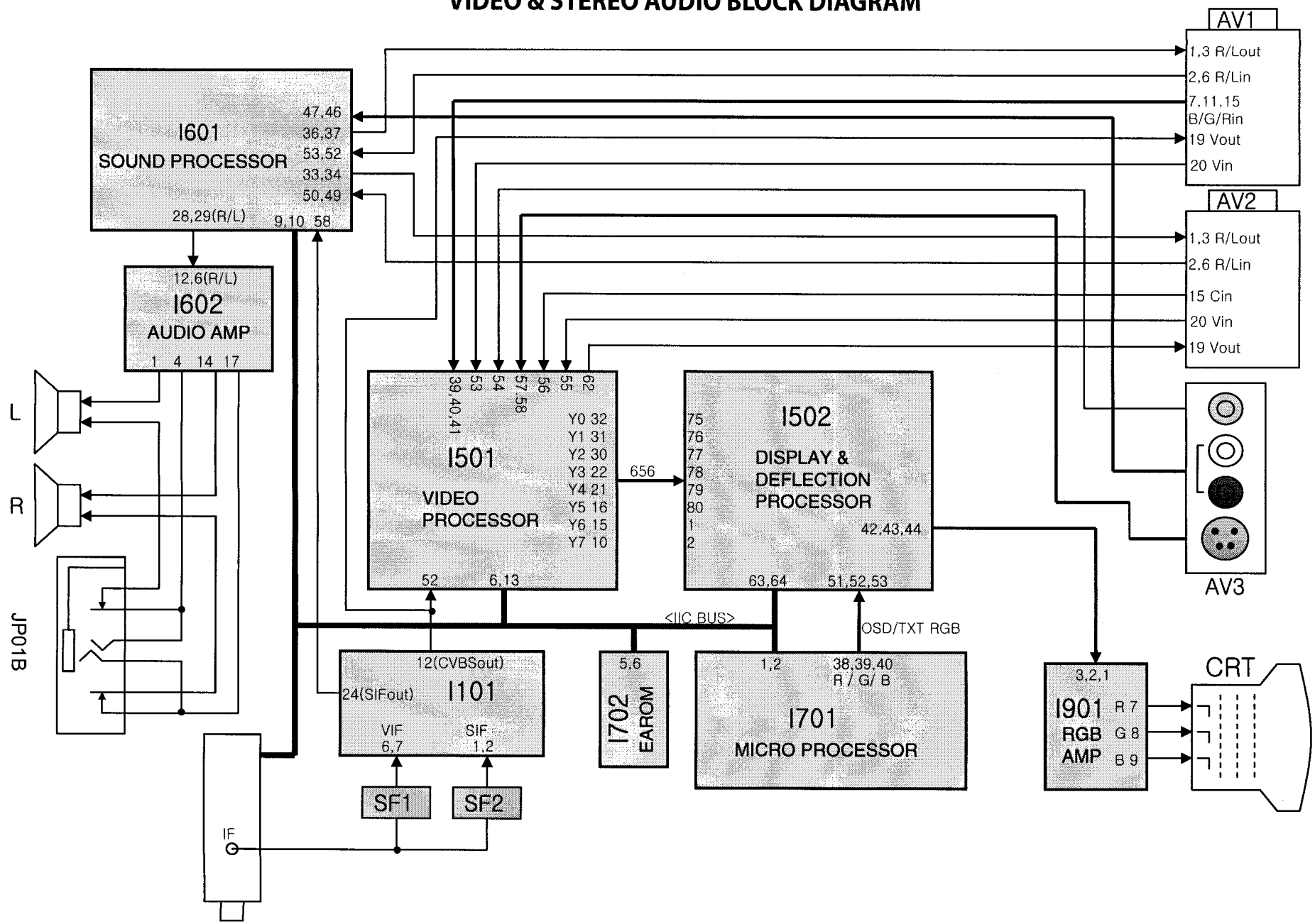

POWER SUPPLY & CONTROL BLOCK DIAGRAM

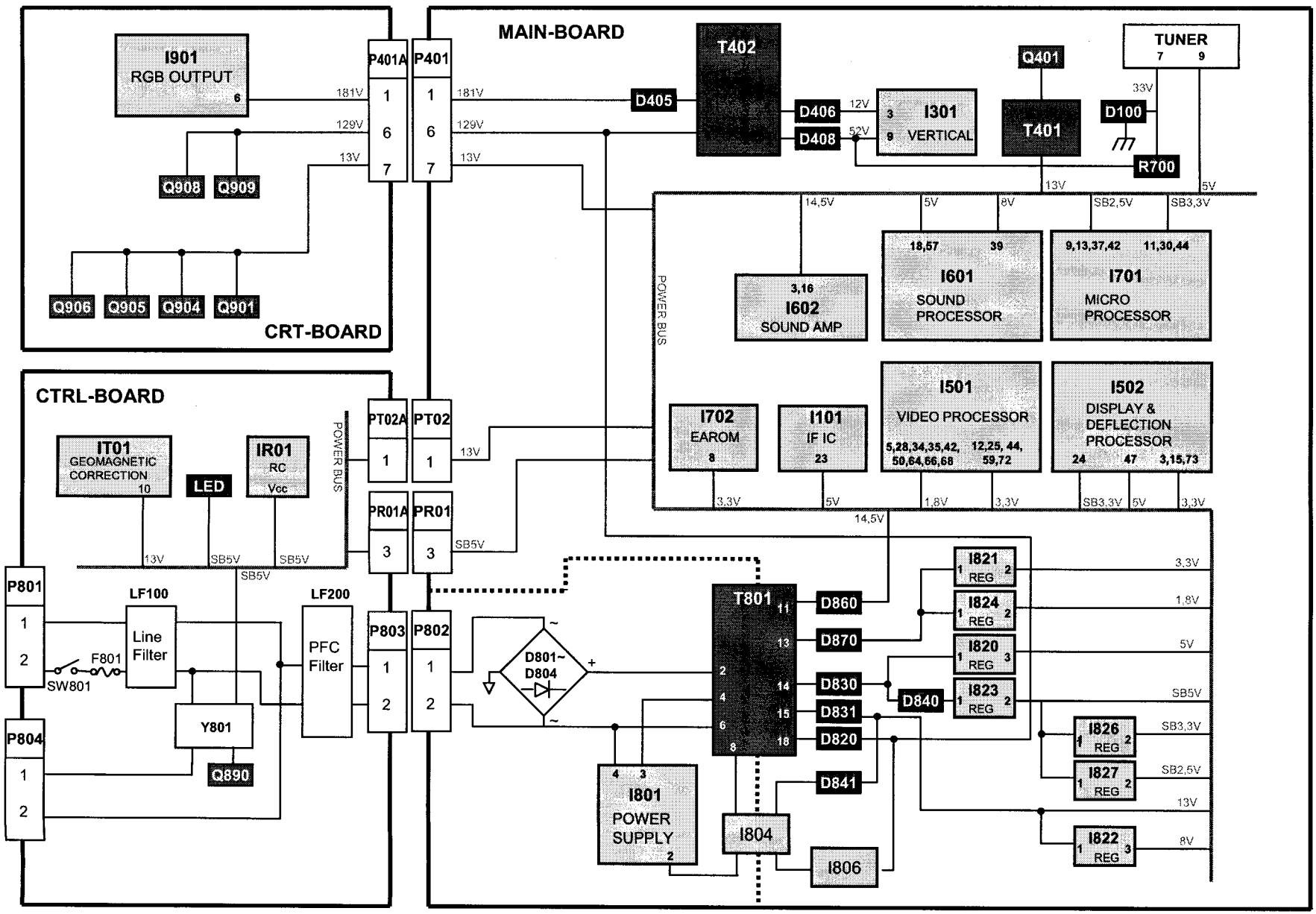

PARTS LOCATION

NOTE:
The numbers on the exploded view below refer to the exploded view section of the Replacement Parts List.

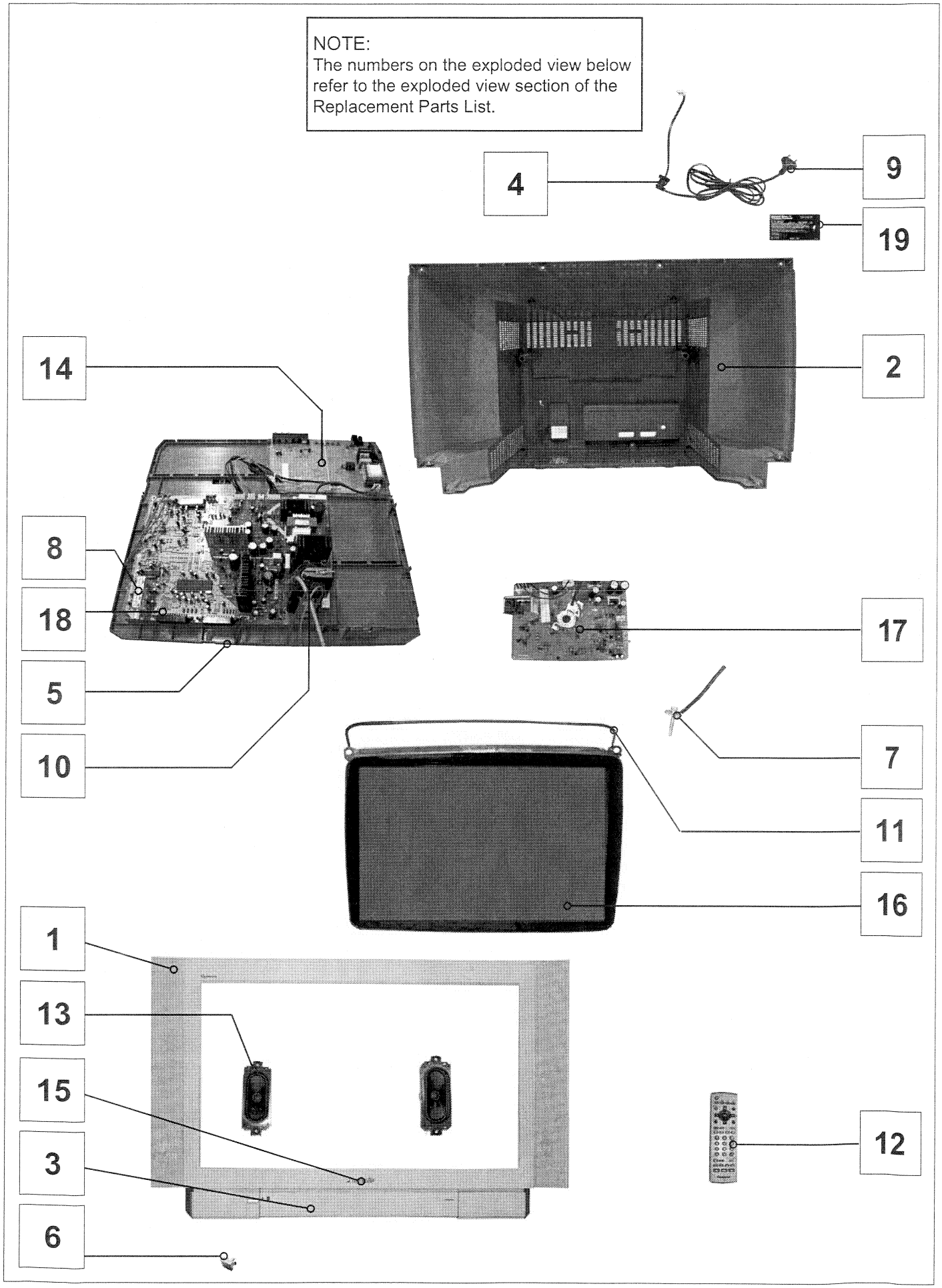

REPLACEMENT PARTS LIST

Important Safety Notice

Components Identified by ⚠ mark have special characteristics important for safety.
* When replacing any of these components, use only manufacturers specified parts.
In case of ordering these spare parts, please always add the complete Model-Type number to your order.

Cct Ref	Parts Number	Description	
COMMON PARTS			
EXPLODED VIEW			
1	4852092300	CABINET	
2	4852174700	BACK COVER	⚠
3	4852826101	DOOR	
4	4853535500	HOLDER AC CORD	
5	4853828210	CHASSIS FRAME	
6	4854871201	POWER BUTTON	
7	4856017754	SCREW CRT FIX	
8	4859724930	TUNER	
9	4859906210	POWER CORD	⚠
10	50H0000301	F.B.T.	⚠
11	58G0000165	DEGAUSS COIL	⚠
12	EUR7628030AR	REMOTE CONTROL	
13	FB126C2-B1	SPEAKER	
14	PTCTMSV32P1F	CONTROL P.C.B.	⚠
15	TBM8E1928	PANASONIC BADGE	
MISCELLANEOUS COMPONENTS			
.	4853418800	CRT BRACKET A	
.	4853418900	CRT BRACKET B	
.	4855062400	PRESET LABEL	
.	4855062500	PRESET LABEL	
.	4855555500	DECO SENSOR	
.	4857541000	COVER SPEAKER	
.	49519A0110	CRT GROUND NET	
.	LA701	DOOR LOCK	
G900	4SG0DX0001	SPARK GAP	
G901	4SG0DX0001	SPARK GAP	
G902	4SG0DX0001	SPARK GAP	
G903	4SG0DX0001	SPARK GAP	
G904	4SG0DX0001	SPARK GAP	
PWC1A	4850K01000	CORE FERRITE	
I.C.s			
I101	TDA4470M	IC IF	
I301	TDA8358J	IC VERTICAL	
I501	VSP9402AQ	IC CHIP VIDEO	
I502	DDP3315CQ	IC CHIP	
I601	MSP3410V3	IC SOUND	
I602	TDA8946J	IC AUDIO	
I704	K1A7025AP	IC RESET	
I801	STRF6654	IC SMPS	
I804	LTV817C	PHOTO COUPLER	⚠
I806	DP130	IC ERROR AMP	
I810	TX0202DA	THYRISTOR	
I820	S7805P1C	IC REGULATOR	

Cct Ref	Parts Number	Description	
I821	LD1117V33	IC REGULATOR	
I822	L7808CV	IC REGULATOR	
I823	LD1117V50	IC REGULATOR	
I824	LD1117V18	IC REGULATOR	
I826	LD1117V33	IC REGULATOR	
I827	LD1117V25	IC REGULATOR	
I901	TDA6108JF	RGB OUTPUT	
IR01	1TS0P1238W	IC PREAMP	
IT01	LA6515	EARTH CORRECTION	
FUSES			
F801	5FSCB4022R	FUSE 4A250V	⚠
DIODES			
D100	DTZX33B	DIODE ZENER	
D101	DBAT85	DIODE	
D103	BA282	DIODE	
D313	DRGP15J	DIODE	
D360	DTZX22C	DIODE	
D361	DTZX33B	DIODE ZENER	
D362	DTZX33B	DIODE ZENER	
D367	DTZX33B	DIODE ZENER	
D404	DFMP3FU	DIODE	
D405	1N4937G	DIODE	
D406	HER308G	DIODE	
D408	1N4937G	DIODE	
D410	1N4937G	DIODE	
D414	1N4004S	DIODE	
D415	1N4937G	DIODE	
D530	1N4148	DIODE	
D531	1N4148	DIODE	
D535	1N4148	DIODE	
D540	1N4148	DIODE	
D541	1N4148	DIODE	
D550	1N4148	DIODE	
D551	1N4148	DIODE	
D602	1N4148	DIODE	
D701	1N4148	DIODE	
D702	1N4148	DIODE	
D720	TZX2V7A	DIODE ZENER	
D730	TZX7V5C	DIODE ZENER	
D733	TZX7V5C	DIODE ZENER	
D777	DTZX5V6B	DIODE	
D801	LT2A05G	DIODE	
D802	LT2A05G	DIODE	
D803	LT2A05G	DIODE	
D804	LT2A05G	DIODE	
D805	DRGP15J	DIODE	
D806	DRGP15J	DIODE	
D808	DRGP15J	DIODE	
D809	DRGP15J	DIODE	
D811	DTZX6V2	DIODE ZENER	
D820	DBYW76	DIODE	

Cct Ref	Parts Number	Description
D821	DRGP15J	DIODE
D824	1N4148	DIODE
D825	1N4148	DIODE
D830	DRGP15J	DIODE
D831	DRGP15J	DIODE
D840	1N4004S	DIODE
D841	1N4004S	DIODE
D860	DBYW76	DIODE
D870	DRGP15J	DIODE
D890	1N4148	DIODE
D906	1N4148	DIODE
D907	1N4148	DIODE
D908	1N4148	DIODE
D909	1N4148	DIODE
D910	1N4148	DIODE
D911	1N4004S	DIODE
D912	1N4004S	DIODE
D913	1N4004S	DIODE
D914	EU1Z	DIODE
D915	EU1Z	DIODE
D921	1N4004S	DIODE
D922	1N4004S	DIODE
D923	1N4004S	DIODE
D997	LT2A05G	DIODE
DA11	DTZX5V6B	DIODE
DA16	DTZX5V6B	DIODE
DA17	DTZX5V6B	DIODE
DA27	DTZX5V6B	DIODE
DT01	DTZX5V6B	DIODE
DT02	DTZX5V6B	DIODE
DT03	DTZX5V6B	DIODE
TRANSISTORS		
Q103	2SC5343Y	TRANSISTOR
Q104	2SC5343Y	TRANSISTOR
Q110	2SC5343Y	TRANSISTOR
Q150	2SC5343Y	TRANSISTOR
Q151	2SC5343Y	TRANSISTOR
Q333	2SC5343Y	TRANSISTOR
Q334	2SC5343Y	TRANSISTOR
Q401	ST2310DH1	TRANSISTOR
Q402	2SD1207	TRANSISTOR
Q502	2SC5343Y	TRANSISTOR
Q503	2SC5343Y	TRANSISTOR
Q504	2SA1980Y	TRANSISTOR
Q542	2SA1980Y	TRANSISTOR
Q543	2SA1980Y	TRANSISTOR
Q544	2SA1980Y	TRANSISTOR
Q550	2SC5343Y	TRANSISTOR
Q601	2SA1980Y	TRANSISTOR
Q730	2SC5343Y	TRANSISTOR
Q731	2SC5343Y	TRANSISTOR
Q733	2SC5343Y	TRANSISTOR
Q734	2SC5343Y	TRANSISTOR
Q807	2SC5343Y	TRANSISTOR
Q808	2SC5343Y	TRANSISTOR
Q809	2SC5343Y	TRANSISTOR
Q810	2SC5343Y	TRANSISTOR
Q811	2SC5343Y	TRANSISTOR
Q890	KTC3203-Y	TRANSISTOR
Q901	2SC5343Y	TRANSISTOR
Q902	2SC5343Y	TRANSISTOR
Q903	2SC5343Y	TRANSISTOR
Q904	2SC5343Y	TRANSISTOR
Q905	2SC5343Y	TRANSISTOR
Q906	2SC5343Y	TRANSISTOR
Q907	2SA1980Y	TRANSISTOR

Cct Ref	Parts Number	Description	
Q908	KTA1659AY	TRANSISTOR	
Q909	KTC4370AY	TRANSISTOR	
Q921	TBF423	TRANSISTOR	
Q922	TBF423	TRANSISTOR	
Q923	TBF423	TRANSISTOR	
QR01	2SC5343Y	TRANSISTOR	
QS01	2SC5343Y	TRANSISTOR	
QT01	2SC5343Y	TRANSISTOR	
TRANSFORMERS			
T401	50D25A2	TRANSFORMER DRIVE	
T801	50M4936B4-	TRANSFORMER SMPS	⚠
COILS			
L101	5CPX479K--	PEAKING COIL	
L105	PZ479K02	PEAKING COIL	
L150	TRF-A005	COIL AFT	
L153	5CPZ120K02	PEAKING COIL	
L380	58C0000120	COIL CHOKE	
L381	58C0000120	COIL CHOKE	
L402	5MC0000100	COIL BEAD	
L403	58C0000118	COIL CHOKE	
L501	5CPZ479K04	COIL PEAKING	
L502	5CPZ479K04	COIL PEAKING	
L506	5CPZ479K04	COIL PEAKING	
L507	5CPZ100K04	PEAKING COIL	
L524	5CPZ100K02	PEAKING COIL	
L551	5CPZ479K04	COIL PEAKING	
L568	5CPZ100K02	PEAKING COIL	
L601	PZ479K02	PEAKING COIL	
L602	5CPZ100K02	PEAKING COIL	
L603	PZ479K02	PEAKING COIL	
L605	PZ479K02	PEAKING COIL	
L650	5MC0000100	COIL BEAD	
L709	5CPZ100K02	PEAKING COIL	
L711	5CPZ100K02	PEAKING COIL	
L713	5CPZ100K02	PEAKING COIL	
L730	5CPZ100K02	PEAKING COIL	
L737	5CPZ100K02	PEAKING COIL	
L742	5CPZ100K02	PEAKING COIL	
L744	5CPZ100K02	PEAKING COIL	
L801	5MC0000100	COIL BEAD	
L802	58CX430599	COIL CHOKE	
L901	5MC0000100	COIL BEAD	
L902	5MC0000100	COIL BEAD	
L903	5MC0000100	COIL BEAD	
L904	58C0000116	COIL BEAD	
LF200	58C0000153	COIL CHOKE PFC	⚠
LP01	PZ569K02	COIL	
FILTERS			
FT03	5PXF1B471M	FILTER	
FT04	5PXF1B471M	FILTER	
LF100	5PLF24A3	FILTER LINE	⚠
SF1	K3953M	FILTER SAW	
SF2	5PK9650M--	FILTER SAW	
Z153	5PXXT5R5MB	FILTER CERA	
Z601	5PXF1B471M	FILTER	
Z602	5PXF1B471M	FILTER	
Z603	5PXF1B471M	FILTER	
Z604	5PXF1B471M	FILTER	
Z605	5PXF1B471M	FILTER	
Z606	5PXF1B471M	FILTER	
Z607	5PXF1B471M	FILTER	
Z608	5PXF1B471M	FILTER	
ZT01	5PXF1B471M	FILTER	
ZT02	5PXF1B471M	FILTER	

Cct Ref	Parts Number	Description			
CRYSTALS					
X501	5XE20R250E	CRYSTAL QUARTZ			
X502	5XEX5R000E	CRYSTAL QUARTZ			
X601	5XE18R432E	CRYSTAL QUARTZ			
X701	E6R0000C	CRYSTAL QUARTZ			
RESISTORS					
R103	ERD25TJ123	CARBON	0.25W	5%	12K Ω
R110	RN-4Z1502F	METAL	0.25W	1%	15K Ω
R111	RD-AZ133J-	CARBON	0.17W	5%	13K Ω
R150	ERD25TJ561	CARBON	0.25W	5%	560 Ω
R151	ERD25TJ102	CARBON	0.25W	5%	1K Ω
R152	ERD25TJ271	CARBON	0.25W	5%	270 Ω
R154	RD-AZ470J	CARBON	0.17W	5%	47 Ω
R155	RD-AZ751J	CARBON	.166W	5%	750 Ω
R162	ERD25TJ153	CARBON	0.25W	5%	15K Ω
R163	ERD25TJ752	CARBON	0.25W	5%	7K5 Ω
R190	ERD25TJ221	CARBON	0.25W	5%	220 Ω
R191	ERD25TJ331	CARBON	0.25W	5%	330 Ω
R301	ERD25TJ472	CARBON	0.25W	5%	4K7 Ω
R310	RD-AZ432J-	CARBON	0.17W	5%	4K3 Ω
R311	RD-AZ432J-	CARBON	0.17W	5%	4K3 Ω
R331	RS02Y331JS	METAL	2W	5%	330 Ω
R333	ERD25TJ222	CARBON	0.25W	5%	2K2 Ω
R334	ERD25TJ222	CARBON	0.25W	5%	2K2 Ω
R345	ERD25TJ473	CARBON	0.25W	5%	47K Ω
R350	RN-AZ2201F	METAL	0.17W	-	2K2 Ω
R351	RN-AZ2201F	METAL	0.17W	-	2K2 Ω
R370	ERD25TJ159	CARBON	0.25W	5%	1.5 Ω
R394	ERD25TJ272	CARBON	0.25W	5%	2K7 Ω
R395	ERD25TJ564	CARBON	0.25W	5%	560K Ω
R396	ERD25TJ272	CARBON	0.25W	5%	2K7 Ω
R397	ERD25TJ823	CARBON	0.25W	5%	82K Ω
R398	RW02Y828FS	WOUND	2W	1%	R82 Ω
R399	RS02Y829JS	METAL	2W	5%	8R2 Ω
R401	RX05V390J	CEMENT	5W	5%	39 Ω
R410	RS02Y473JS	METAL	2W	5%	47K Ω
R414	ERD25TJ681	CARBON	0.25W	5%	680 Ω
R415	RS02Y561JS	METAL	2W	5%	560 Ω
R416	RD-4Z471J	CARBON	0.25W	5%	470 Ω
R420	ERD25TJ471	CARBON	0.25W	5%	470 Ω
R424	ERD25TJ472	CARBON	0.25W	5%	4K7 Ω
R430	RD-4Z152J-	CARBON	0.25W	5%	1K5 Ω
R440	RD-4Z334J	CARBON	0.25W	5%	330K Ω
R444	RS02Y330JS	METAL	2W	5%	33 Ω
R501	ERD25TJ101	CARBON	0.25W	5%	100 Ω
R502	ERD25TJ101	CARBON	0.25W	5%	100 Ω
R504	ERD25TJ102	CARBON	0.25W	5%	1K Ω
R507	ERD25TJ562	CARBON	0.25W	5%	5K6 Ω
R509	ERD25TJ472	CARBON	0.25W	5%	4K7 Ω
R510	ERD25TJ101	CARBON	0.25W	5%	100 Ω
R511	RD-AZ330J	CARBON	0.17W	5%	33 Ω
R512	RD-AZ330J	CARBON	0.17W	5%	33 Ω
R513	RD-AZ330J	CARBON	0.17W	5%	33 Ω
R514	ERD25TJ151	CARBON	0.25W	5%	150 Ω
R515	ERD25TJ223	CARBON	0.25W	5%	22K Ω
R516	ERD25TJ752	CARBON	0.25W	5%	7K5 Ω
R517	ERD25TJ471	CARBON	0.25W	5%	470 Ω
R518	ERD25TJ750	CARBON	0.25W	5%	75 Ω
R519	ERD25TJ750	CARBON	0.25W	5%	75 Ω
R520	ERD25TJ750	CARBON	0.25W	5%	75 Ω
R524	ERD25TJ391	CARBON	0.25W	5%	390 Ω
R525	ERD25TJ101	CARBON	0.25W	5%	100 Ω
R533	ERD25TJ392	CARBON	0.25W	5%	3K9 Ω
R534	ERD25TJ391	CARBON	0.25W	5%	390 Ω
R535	ERD25TJ122	CARBON	0.25W	5%	1K2 Ω
R537	RD-AZ301J	CARBON	0.17W	5%	300 Ω

Cct Ref	Parts Number	Description			
R538	RD-AZ301J	CARBON	0.17W	5%	300 Ω
R540	ERD25TJ472	CARBON	0.25W	5%	4K7 Ω
R545	ERD25TJ750	CARBON	0.25W	5%	75 Ω
R551	ERD25TJ471	CARBON	0.25W	5%	470 Ω
R563	ERD25TJ101	CARBON	0.25W	5%	100 Ω
R564	ERD25TJ101	CARBON	0.25W	5%	100 Ω
R566	ERD25TJ220	CARBON	0.25W	5%	22 Ω
R570	ERD25TJ271	CARBON	0.25W	5%	270 Ω
R576	ERD25TJ151	CARBON	0.25W	5%	150 Ω
R580	ERD25TJ101	CARBON	0.25W	5%	100 Ω
R588	ERD25TJ101	CARBON	0.25W	5%	100 Ω
R590	ERD25TJ102	CARBON	0.25W	5%	1K Ω
R593	RD-AZ203J	CARBON	0.17W	5%	20K Ω
R594	ERD25TJ101	CARBON	0.25W	5%	100 Ω
R595	ERD25TJ101	CARBON	0.25W	5%	100 Ω
R599	ERD25TJ151	CARBON	0.25W	5%	150 Ω
R602	ERD25TJ104	CARBON	0.25W	5%	100K Ω
R605	ERD25TJ101	CARBON	0.25W	5%	100 Ω
R606	ERD25TJ101	CARBON	0.25W	5%	100 Ω
R614	ERD25TJ102	CARBON	0.25W	5%	1K Ω
R615	ERD25TJ102	CARBON	0.25W	5%	1K Ω
R620	RD-AZ242J	CARBON	0.17W	5%	2K4 Ω
R621	ERD25TJ102	CARBON	0.25W	5%	1K Ω
R622	ERD25TJ102	CARBON	0.25W	5%	1K Ω
R641	ERD25TJ102	CARBON	0.25W	5%	1K Ω
R642	ERD25TJ102	CARBON	0.25W	5%	1K Ω
R646	ERD25TJ102	CARBON	0.25W	5%	1K Ω
R647	ERD25TJ102	CARBON	0.25W	5%	1K Ω
R649	ERD25TJ102	CARBON	0.25W	5%	1K Ω
R650	ERD25TJ682	CARBON	0.25W	5%	6K8 Ω
R651	ERD25TJ102	CARBON	0.25W	5%	1K Ω
R652	ERD25TJ102	CARBON	0.25W	5%	1K Ω
R660	ERD25TJ682	CARBON	0.25W	5%	6K8 Ω
R680	ERD25TJ473	CARBON	0.25W	5%	47K Ω
R700	ERDS1TJ232	CARBON	0.5W	5%	2K3 Ω
R701	ERD25TJ472	CARBON	0.25W	5%	4K7 Ω
R702	ERD25TJ102	CARBON	0.25W	5%	1K Ω
R703	ERD25TJ101	CARBON	0.25W	5%	100 Ω
R704	ERD25TJ101	CARBON	0.25W	5%	100 Ω
R708	ERD25TJ472	CARBON	0.25W	5%	4K7 Ω
R716	RD-AZ113J	CARBON	0.166	5%	11K Ω
R718	RN-AZ3902F	METAL	0.17W	-	39K Ω
R720	ERD25TJ681	CARBON	0.25W	5%	680 Ω
R733	ERD25TJ223	CARBON	0.25W	5%	22K Ω
R741	ERD25TJ101	CARBON	0.25W	5%	100 Ω
R748	ERD25TJ101	CARBON	0.25W	5%	100 Ω
R777	ERD25TJ750	CARBON	0.25W	5%	75 Ω
R801	DDB7R0M290	POSISTOR	-	-	- Ω ⚠
R802	RS02Y753JS	METAL	2W	5%	75K Ω
R804	RF01Y158K	FUSIBLE	1W	10%	R15 Ω
R805	RD-2Z100J	CARBON	0.5W	5%	10 Ω
R806	RD-2Z472J	CARBON	0.5W	5%	4K7 Ω
R807	RD-2Z272J	CARBON	0.5W	5%	2K7 Ω
R808	RD-2Z821J	CARBON	0.5W	5%	820 Ω
R810	ERD25TJ102	CARBON	0.25W	5%	1K Ω
R811	RC-2Z565KP	CARBON	0.5W	10%	5.6M Ω ⚠
R817	ERD25TJ473	CARBON	0.25W	5%	47K Ω
R819	RX10B339JN	SOLID	10W	5%	3R3 Ω
R820	ERD25TJ102	CARBON	0.25W	5%	1K Ω
R821	ERD25TJ102	CARBON	0.25W	5%	1K Ω
R829	ERD25TJ103	CARBON	0.25W	5%	10K Ω
R830	ERD25TJ332	CARBON	0.25W	5%	3K3 Ω
R841	RD-2Z470J	CARBON	0.5W	5%	47 Ω
R850	RS02Y129JS	METAL	2W	-	1R2 Ω
R854	RS02Y569JS	METAL	2W	5%	5R6 Ω
R870	ERD25TJ222	CARBON	0.25W	5%	2K2 Ω

Cct Ref	Parts Number	Description			
R890	ERD25TJ472	CARBON	0.25W	5%	4K7 Ω
R891	ERD25TJ473	CARBON	0.25W	5%	47K Ω
R892	RD-AZ470J	CARBON	0.17W	5%	47 Ω
R893	ERD25TJ472	CARBON	0.25W	5%	4K7 Ω
R901	ERD25TJ101	CARBON	0.25W	5%	100 Ω
R902	ERD25TJ101	CARBON	0.25W	5%	100 Ω
R903	ERD25TJ101	CARBON	0.25W	5%	100 Ω
R906	RF02Y629J	FUSIBLE	2W	5%	6R2 Ω
R911	ERD25TJ101	CARBON	0.25W	5%	100 Ω
R912	ERD25TJ101	CARBON	0.25W	5%	100 Ω
R913	ERD25TJ101	CARBON	0.25W	5%	100 Ω
R915	RS02Y100JS	METAL	2W	5%	10 Ω
R924	ERD25TJ102	CARBON	0.25W	5%	1K Ω
R925	ERD25TJ471	CARBON	0.25W	5%	470 Ω
R926	RD-2Z471J	CARBON	0.5W	5%	470 Ω
R927	RD-AZ121J	CARBON	0.166	5%	120 Ω
R928	ERD25TJ223	CARBON	0.25W	5%	22K Ω
R929	RD-AZ273J	CARBON	0.17W	5%	27K Ω
R930	ERD25TJ333	CARBON	0.25W	5%	33K Ω
R931	ERD25TJ333	CARBON	0.25W	5%	33K Ω
R932	ERD25TJ333	CARBON	0.25W	5%	33K Ω
R933	ERD25TJ333	CARBON	0.25W	5%	33K Ω
R934	ERD25TJ393	CARBON	0.25W	5%	39K Ω
R935	ERD25TJ563	CARBON	0.25W	5%	56K Ω
R936	ERD25TJ103	CARBON	0.25W	5%	10K Ω
R937	ERD25TJ820	CARBON	0.25W	5%	82 Ω
R938	RD-2Z100J	CARBON	0.5W	5%	10 Ω
R939	ERD25TJ820	CARBON	0.25W	5%	82 Ω
R940	ERD25TJ122	CARBON	0.25W	5%	1K2 Ω
R941	ERD25TJ152	CARBON	0.25W	5%	1K5 Ω
R942	ERD25TJ683	CARBON	0.25W	5%	68K Ω
R943	ERD25TJ683	CARBON	0.25W	5%	68K Ω
R944	ERD25TJ123	CARBON	0.25W	5%	12K Ω
R945	ERD25TJ122	CARBON	0.25W	5%	1K2 Ω
R946	ERD25TJ152	CARBON	0.25W	5%	1K5 Ω
R947	RD-2Z620J	CARBON	0.5W	5%	62 Ω
R948	RD-2Z279J	CARBON	0.5W	5%	2R7 Ω
R950	RD-2Z279J	CARBON	0.5W	5%	2R7 Ω
R951	RN01B102JS	METAL	1W	5%	1K Ω
R952	RD-2Z620J	CARBON	0.5W	5%	62 Ω
R953	ERG2SJS391	METAL	2W	5%	390 Ω
R955	ERD25TJ182	CARBON	0.25W	5%	1K8 Ω
R956	RN02B100JS	METAL	2W	5%	10 Ω
R963	ERD25TJ392	CARBON	0.25W	5%	3K9 Ω
R964	ERD25TJ392	CARBON	0.25W	5%	3K9 Ω
R965	RD-2Z100J	CARBON	0.5W	5%	10 Ω
R966	ERD25TJ222	CARBON	0.25W	5%	2K2 Ω
R967	ERD25TJ431	CARBON	0.25W	5%	430 Ω
R996	ERDS1TJ105	CARBON	0.5W	5%	1M Ω
R997	ERDS1TJ102	CARBON	0.5W	5%	1K Ω
RA01	ERD25TJ220	CARBON	0.25W	5%	22 Ω
RA15	ERD25TJ680	CARBON	0.25W	5%	68 Ω
RA16	ERD25TJ750	CARBON	0.25W	5%	75 Ω
RA35	ERD25TJ750	CARBON	0.25W	5%	75 Ω
RA88	ERD25TJ750	CARBON	0.25W	5%	75 Ω
RC102	HRFT561JBA	CHIP	0.1W	5%	560 Ω
RC106	HRFT101JBA	CHIP	0.1W	5%	100 Ω
RC107	HRFT101JBA	CHIP	0.1W	5%	100 Ω
RC109	HRFT104JBA	CHIP	0.1W	5%	100K Ω
RC112	HRFT223JBA	CHIP	0.1W	5%	22K Ω
RC114	HRFT472JBA	CHIP	0.1W	5%	4K7 Ω
RC118	HRFT151JBA	CHIP	0.1W	5%	150 Ω
RC119	HRFT272JBA	CHIP	0.1W	5%	2K7 Ω
RC153	HRFT470JBA	CHIP	0.1W	5%	47 Ω
RC159	HRFT682JBA	CHIP	0.1W	5%	6K8 Ω
RC160	HRFT472JBA	CHIP	0.1W	5%	4K7 Ω

Cct Ref	Parts Number	Description			
RC161	HRFT102JBA	CHIP	0.1W	5%	1K Ω
RC164	HRFT752JBA	CHIP	0.1W	5%	7K5 Ω
RC169	HRFT222JBA	CHIP	0.1W	5%	2K2 Ω
RC177	HRFT562JBA	CHIP	0.1W	5%	5K6 Ω
RC179	HRFT222JBA	CHIP	0.1W	5%	2K2 Ω
RC501	HRFT221JBA	CHIP	0.1W	5%	220 Ω
RC506	HRFT750JBA	CHIP	0.1W	5%	75 Ω
RC513	HRFT103JBA	CHIP	0.1W	5%	10K Ω
RC516	HRFT471JBA	CHIP	0.1W	5%	470 Ω
RC517	HRFT332JBA	CHIP	0.1W	5%	3K3 Ω
RC518	HRFT151JBA	CHIP	0.1W	5%	150 Ω
RC519	HRFT151JBA	CHIP	0.1W	5%	150 Ω
RC527	HRFT333JBA	CHIP	0.1W	5%	33K Ω
RC530	HRFT103JBA	CHIP	0.1W	5%	10K Ω
RC532	HRFT223JBA	CHIP	0.1W	5%	22K Ω
RC550	HRFT102JBA	CHIP	0.1W	5%	1K Ω
RC551	HRFT471JBA	CHIP	0.1W	5%	470 Ω
RC560	HRFT102JBA	CHIP	0.1W	5%	1K Ω
RC568	HRFT102JBA	CHIP	0.1W	5%	1K Ω
RC577	HRFT151JBA	CHIP	0.1W	5%	150 Ω
RC578	HRFT330JBA	CHIP	0.1W	5%	33 Ω
RC579	HRFT330JBA	CHIP	0.1W	5%	33 Ω
RC580	HRFT821JBA	CHIP	0.1W	5%	820 Ω
RC581	HRFT102JBA	CHIP	0.1W	5%	1K Ω
RC582	HRFT102JBA	CHIP	0.1W	5%	1K Ω
RC583	HRFT102JBA	CHIP	0.1W	5%	1K Ω
RC584	HRFT821JBA	CHIP	0.1W	5%	820 Ω
RC585	HRFT911JBA	CHIP	0.1W	5%	910 Ω
RC586	HRFT911JBA	CHIP	0.1W	5%	910 Ω
RC587	HRFT821JBA	CHIP	0.1W	5%	820 Ω
RC589	HRFT330JBA	CHIP	0.1W	5%	33 Ω
RC591	HRFT393JBA	CHIP	0.1W	5%	39K Ω
RC595	HRFT271JBA	CHIP	0.1W	5%	270 Ω
RC598	HRFT271JBA	CHIP	0.1W	5%	270 Ω
RC661	HRFT512JBA	CHIP	0.1W	5%	5K1 Ω
RC662	HRFT512JBA	CHIP	0.1W	5%	5K1 Ω
RC701	HRFT103JBA	CHIP	0.1W	5%	10K Ω
RC715	HRFT103JBA	CHIP	0.1W	5%	10K Ω
RC718	HRFT223JBA	CHIP	0.1W	5%	22K Ω
RC725	HRFT103JBA	CHIP	0.1W	5%	10K Ω
RC729	HRFT103JBA	CHIP	0.1W	5%	10K Ω
RC730	HRFT223JBA	CHIP	0.1W	5%	22K Ω
RC731	HRFT223JBA	CHIP	0.1W	5%	22K Ω
RC732	HRFT103JBA	CHIP	0.1W	5%	10K Ω
RC733	HRFT473JBA	CHIP	0.1W	5%	47K Ω
RC734	HRFT103JBA	CHIP	0.1W	5%	10K Ω
RC735	HRFT223JBA	CHIP	0.1W	5%	22K Ω
RC736	HRFT103JBA	CHIP	0.1W	5%	10K Ω
RC737	HRFT682JBA	CHIP	0.1W	5%	6K8 Ω
RC738	HRFT000-BA	CHIP	0.1W	-	0 Ω
RC739	HRFT000-BA	CHIP	0.1W	-	0 Ω
RC740	HRFT000-BA	CHIP	0.1W	-	0 Ω
RC741	HRFT682JBA	CHIP	0.1W	5%	6K8 Ω
RC742	HRFT682JBA	CHIP	0.1W	5%	6K8 Ω
RC743	HRFT682JBA	CHIP	0.1W	5%	6K8 Ω
RC750	HRFT183JBA	CHIP	0.1W	5%	18K Ω
RC751	HRFT472JBA	CHIP	0.1W	5%	4K7 Ω
RC770	HRFT332JBA	CHIP	0.1W	5%	3K3 Ω
RC781	HRFT332JBA	CHIP	0.1W	5%	3K3 Ω
RC787	HRFT103JBA	CHIP	0.1W	5%	10K Ω
RC788	HRFT103JBA	CHIP	0.1W	5%	10K Ω
RC789	HRFT103JBA	CHIP	0.1W	5%	10K Ω
RC790	HRFT512JBA	CHIP	0.1W	5%	5K1 Ω
RC791	HRFT103JBA	CHIP	0.1W	5%	10K Ω
RC799	HRFT472JBA	CHIP	0.1W	5%	4K7 Ω
RCS02	HRFT223JBA	CHIP	0.1W	5%	22K Ω

Cct Ref	Parts Number	Description			
RCS03	HRFT330JBA	CHIP	0.1W	5%	33 Ω
RR01	ERD25TJ151	CARBON	0.25W	5%	150 Ω
RR02	RD-4Z241J	CARBON	0.25W	5%	240 Ω
RR03	ERD25TJ391	CARBON	0.25W	5%	390 Ω
RR04	ERD25TJ102	CARBON	0.25W	5%	1K Ω
RR05	ERD25TJ472	CARBON	0.25W	5%	4K7 Ω
RR06	ERD25TJ221	CARBON	0.25W	5%	220 Ω
RR08	ERD25TJ331	CARBON	0.25W	5%	330 Ω
RR10	ERD25TJ102	CARBON	0.25W	5%	1K Ω
RR11	ERD25TJ101	CARBON	0.25W	5%	100 Ω
RS01	ERD25TJ271	CARBON	0.25W	5%	270 Ω
RS04	ERD25TJ151	CARBON	0.25W	5%	150 Ω
RT01	ERD25TJ392	CARBON	0.25W	5%	3K9 Ω
RT02	RD-2Z229J	CARBON	0.5W	5%	2R2 Ω
RT03	RD-AZ273J	CARBON	0.17W	5%	27K Ω
RT04	ERD25TJ392	CARBON	0.25W	5%	3K9 Ω
RT06	ERD25TJ103	CARBON	0.25W	5%	10K Ω
RT07	RD-AZ273J	CARBON	0.17W	5%	27K Ω
RT08	ERD25TJ103	CARBON	0.25W	5%	10K Ω
RT09	ERD25TJ272	CARBON	0.25W	5%	2K7 Ω
RT10	ERD25TJ472	CARBON	0.25W	5%	4K7 Ω
RT11	ERD25TJ473	CARBON	0.25W	5%	47K Ω
RT12	RD-2Z229J	CARBON	0.5W	5%	2R2 Ω
RT13	ERD25TJ102	CARBON	0.25W	5%	1K Ω
RT14	RD-AZ302J-	CARBON	0.17W	5%	3K Ω
RT16	ERD25TJ102	CARBON	0.25W	5%	1K Ω
RT18	ERDS1TJ151	CARBON	0.5W	5%	150 Ω
RT19	ERDS1TJ151	CARBON	0.5W	5%	150 Ω
RT20	ERD25TJ750	CARBON	0.25W	5%	75 Ω
CAPACITORS					
C101	ECKC1H101J	CERAMIC	50V		100pF
C102	ECEA1ES470	ELECT	25V		47μF
C106	CEXF1H221V	ELECT	50V		220μF
C117	ECEA1H229	ELECT	50V		2.2μF
C118	ECQV1J474JMW	FILM	63V		470nF
C121	ECEA1ES470	ELECT	25V		47μF
C150	CEXF1E100V	ELECT	25V		10μF
C152	CEXF1E100V	ELECT	25V		10μF
C153	ECEA1H229	ELECT	50V		2.2μF
C157	CEXF1E100V	ELECT	25V		10μF
C161	CZCH1H220J	CERAMIC	50V		22pF
C164	ECEA1ES470	ELECT	25V		47μF
C188	CEXF1E100V	ELECT	25V		10μF
C301	CMXM2A224J	FILM	100V		0.22μF
C305	ECEA1ES221	ELECT	25V		220μF
C313	CMXM2A104J	MYLAR	100V		100nF
C315	ECEA1H101	ELECT	50V		100μF
C320	CBXF1H104Z	CERAMIC	50V		0.1μF
C340	CMXM2A683J	FILM	100V		68nF
C350	CMXM2A223J	MYLAR	100V		22nF
C351	CMXM2A223J	MYLAR	100V		22nF
C370	ECCR1H473J	CERAMIC	50V		47nF
C401	ECEA1ES101	ELECT	25V		100μF
C405	CMYE2J183J	MYLAR	630V		18nF
C407	ECCR2H102J	CERAMIC	500V		1nF
C408	CMYF2G304J	MYLAR	400V		300nF
C410	CCXB2H681K	CERAMIC	500V		680pF
C411	ECEA2CS339	ELECT	160V		3.3μF
C415	ECA2EM100B	ELECT	250V		10μF
C416	CCYR3D471K	CERAMIC	2kV		470pF
C417	CMYE2G103J	MYLAR	400V		10nF
C418	CEYD1H689W	ELECT	50V		6.8μF
C424	CMXM2A333J	MYLAR	100V		33nF
C425	ECCR1H472J	CERAMIC	50V		4.7nF
C440	ECKC1H221J	CERAMIC	50V		220pF
C501	CEXF1E100V	ELECT	25V		10μF

Cct Ref	Parts Number	Description		
C502	CEXF1E100V	ELECT	25V	10μF
C503	CEXF1E100V	ELECT	25V	10μF
C504	CEXF1E100V	ELECT	25V	10μF
C505	ECEA1H100	ELECT	50V	10μF
C506	CEXF1E100V	ELECT	25V	10μF
C508	CCZB1H473K	CERAMIC	50V	47nF
C509	CCZB1H473K	CERAMIC	50V	47nF
C510	CCZB1H473K	CERAMIC	50V	47nF
C515	CBZF1H104Z	CERAMIC	50V	100nF
C516	CBZF1H104Z	CERAMIC	50V	100nF
C517	CBZF1H104Z	CERAMIC	50V	100nF
C518	CBZF1H104Z	CERAMIC	50V	100nF
C519	CBZF1H104Z	CERAMIC	50V	100nF
C524	ECEA1ES470	ELECT	25V	47μF
C530	CEXF1E100V	ELECT	25V	10μF
C532	ECKC1H103J	CERAMIC	50V	10nF
C534	ECKC1H103J	CERAMIC	50V	10nF
C536	ECKC1H102J	CERAMIC	50V	1nF
C537	ECKC1H103J	CERAMIC	50V	10nF
C538	ECKC1H103J	CERAMIC	50V	10nF
C540	CCZB1H333K	CERAMIC	50V	33nF
C550	CEXF1E100V	ELECT	25V	10μF
C551	CEXF1E100V	ELECT	25V	10μF
C553	ECKC1H103J	CERAMIC	50V	10nF
C557	CBZF1H104Z	CERAMIC	50V	100nF
C558	CBZF1H104Z	CERAMIC	50V	100nF
C560	ECEA1ES101	ELECT	25V	100μF
C561	CEXF1H339V	ELECT	50V	3.3μF
C568	ECEA1ES101	ELECT	25V	100μF
C590	ECEA1H109	ELECT	50V	1μF
C602	ECEA1ES221	ELECT	25V	220μF
C604	ECEA1ES102	ELECT	25V	1000μF
C605	ECEA1ES470	ELECT	25V	47μF
C608	CEXF1E100V	ELECT	25V	10μF
C610	CEXF1E100V	ELECT	25V	10μF
C611	CEXF1H339V	ELECT	50V	3.3μF
C612	ECEA1H109	ELECT	50V	1μF
C613	ECEA1H109	ELECT	50V	1μF
C614	ECEA1H109	ELECT	50V	1μF
C615	ECEA1H109	ELECT	50V	1μF
C616	CEXF1E100V	ELECT	25V	10μF
C623	ECEA1H109	ELECT	50V	1μF
C624	ECEA1H109	ELECT	50V	1μF
C625	ECEA1ES101	ELECT	25V	100μF
C626	ECEA1ES101	ELECT	25V	100μF
C630	ECEA1ES470	ELECT	25V	47μF
C634	CEXF1E100V	ELECT	25V	10μF
C636	ECEA1ES470	ELECT	25V	47μF
C641	ECEA1ES101	ELECT	25V	100μF
C642	ECEA1ES101	ELECT	25V	100μF
C650	CZSL1H680J	CERAMIC	50V	68pF
C660	CEXF1E100V	ELECT	25V	10μF
C661	CMXM2A224J	FILM	100V	0.22μF
C662	CMXM2A224J	FILM	100V	0.22μF
C666	CBXF1H104Z	CERAMIC	50V	0.1μF
C668	CMXM2A224J	FILM	100V	0.22μF
C669	CMXM2A224J	FILM	100V	0.22μF
C709	ECEA1ES101	ELECT	25V	100μF
C711	ECEA1ES101	ELECT	25V	100μF
C712	CBZF1H104Z	CERAMIC	50V	100nF
C713	CEXF1E100V	ELECT	25V	10μF
C730	CEXF1E100V	ELECT	25V	10μF
C733	ECEA1H229	ELECT	50V	2.2μF
C737	CEXF1E100V	ELECT	25V	10μF
C742	CEXF1E100V	ELECT	25V	10μF
C744	CEXF1E100V	ELECT	25V	10μF

Cct Ref	Parts Number	Description			
C802	CL1UC3474M	CERAMIC	250V	470nF	⚠
C803	ECCR3A472J	CERAMIC	1kV	4.7nF	
C804	ECCR3A472J	CERAMIC	1kV	4.7nF	
C805	ECA2GM181B	ELECT	400V	180μF	
C806	ECEA1H330	ELECT	50V	33μF	
C807	CCZF1H473Z	CERAMIC	50V	47nF	
C808	ECEA1H100	ELECT	50V	10μF	
C809	ECCR1H102J	CERAMIC	50V	1nF	
C811	CCXR3D221K	CERAMIC	2000V	220pF	
C812	CH1BFE472M	CERAMIC	400V	4.7nF	⚠
C813	ECA2EM101	ELECT	250V	100μF	
C814	CEYF2E470V	ELECT	250V	47μF	
C820	CCXR3A471K	CERAMIC	1KV	470pF	
C821	ECCR1H102J	CERAMIC	50V	1nF	
C823	ECEA1ES102	ELECT	25V	1000μF	
C824	ECCR3A471J	CERAMIC	1KV	470pF	
C830	CBZF1H104Z	CERAMIC	50V	100nF	
C831	ECCR3A471J	CERAMIC	1KV	470pF	
C832	ECEA1ES102	ELECT	25V	1000μF	
C835	ECEA1ES470	ELECT	25V	47μF	
C840	ECEA1CS332	ELECT	16V	3300μF	
C841	ECEA1CS222	ELECT	16V	2200μF	
C844	ECEA1ES101	ELECT	25V	100μF	
C845	ECEA1ES102	ELECT	25V	1000μF	
C846	ECEA1ES101	ELECT	25V	100μF	
C847	ECEA1H100	ELECT	50V	10μF	
C850	CCXB1H821K	CERAMIC	50V	820pF	
C861	ECEA1ES102	ELECT	25V	1000μF	
C863	ECEA1ES101	ELECT	25V	100μF	
C864	ECEA1H100	ELECT	50V	10μF	
C866	CCXR3A471K	CERAMIC	1KV	470pF	
C870	ECCR3A471J	CERAMIC	1KV	470pF	
C871	ECEA1ES102	ELECT	25V	1000μF	
C876	ECEA1ES470	ELECT	25V	47μF	
C880	ECEA1ES101	ELECT	25V	100μF	
C888	ECEA1H229	ELECT	50V	2.2μF	
C900	CCXB3D102K	CERAMIC	2kV	1nF	
C902	CMXL2E104K	MYLAR	250V	100nF	
C910	ECA2EM4R7B	ELECT	250V	4.7μF	
C911	ECA2EM4R7B	ELECT	250V	4.7μF	
C915	CMXM2A822J	MYLAR	100V	8.2nF	
C916	ECEA1ES470	ELECT	25V	47μF	
C917	CCZB1H391K	CERAMIC	50V	390pF	
C918	ECKC1H103J	CERAMIC	50V	10nF	
C919	ECKC1H102J	CERAMIC	50V	1nF	
C920	ECEA1ES470	ELECT	25V	47μF	
C921	CMXM2A102J	MYLAR	100V	1nF	
C922	CMXM2A102J	MYLAR	100V	1nF	
C923	CMXM2A102J	MYLAR	100V	1nF	
C924	ECCR1H101J	CERAMIC	50V	100pF	
C925	ECA2EM100B	ELECT	250V	10μF	
C941	ECEA2CS470	ELECT	160V	47μF	
C942	ECA2EM100B	ELECT	250V	10μF	
C943	ECEA2CS470	ELECT	160V	47μF	
C944	CXSL2H560J	CERAMIC	500V	56pF	
C945	ECA2EM100B	ELECT	250V	10μF	
C946	CCXB2H472K	CERAMIC	500V	4700pF	
C947	CCXB2H472K	CERAMIC	500V	4700pF	
C948	ECCR1H101J	CERAMIC	50V	100pF	
C997	ECA2EM100B	ELECT	250V	10μF	
CC01	HCBK471KBA	CHIP CER	50V	470pF	
CC02	HCBK471KBA	CHIP CER	50V	470pF	
CC03	HCBK471KBA	CHIP CER	50V	470pF	
CC04	HCBK471KBA	CHIP CER	50V	470pF	
CC05	HCBK471KBA	CHIP CER	50V	470pF	
CC06	HCBK471KBA	CHIP CER	50V	470pF	

Cct Ref	Parts Number	Description		
CC07	HCBK471KBA	CHIP CER	50V	470pF
CC08	HCBK471KBA	CHIP CER	50V	470pF
CC10	HCBK102KBA	CHIP CER	50V	1nF
CC13	HCBK102KBA	CHIP CER	50V	1nF
CC14	HCBK102KBA	CHIP CER	50V	1nF
CC15	HCBK102KBA	CHIP CER	50V	1nF
CC16	HCBK102KBA	CHIP CER	50V	1nF
CC17	HCBK102KBA	CHIP CER	50V	1nF
CC18	HCBK102KBA	CHIP CER	50V	1nF
CC19	HCBK102KBA	CHIP CER	50V	1nF
CC101	HCBK102KBA	CHIP CER	50V	1nF
CC103	HCBK102KBA	CHIP CER	50V	1nF
CC110	HCBK103KBA	CHIP CER	50V	10nF
CC111	HCBK103KBA	CHIP CER	50V	10nF
CC112	HCBK102KBA	CHIP CER	50V	1nF
CC115	HCBK104KBA	CHIP CER	50V	100nF
CC117	HCBK103KBA	CHIP CER	50V	10nF
CC119	HCBK103KBA	CHIP CER	50V	10nF
CC120	HCQK150JBA	CHIP CER	50V	15pF
CC127	HCBK102KBA	CHIP CER	50V	1nF
CC129	HCBK103KBA	CHIP CER	50V	10nF
CC136	HCBK104KBA	CHIP CER	50V	100nF
CC158	HCBK104KBA	CHIP CER	50V	100nF
CC160	HCBK103KBA	CHIP CER	50V	10nF
CC166	HCQK470JBA	CHIP CER	50V	47pF
CC177	HCQK470JBA	CHIP CER	50V	47pF
CC501	HCBK102KBA	CHIP CER	50V	1nF
CC502	HCBK102KBA	CHIP CER	50V	1nF
CC503	HCFF334ZBA	CHIP CER	16V	330nF
CC504	HCQK100JBA	CHIP CER	50V	10pF
CC505	HCBK102KBA	CHIP CER	50V	1nF
CC506	HCBK104KBA	CHIP CER	50V	100nF
CC507	HCBK102KBA	CHIP CER	50V	1nF
CC508	HCBK102KBA	CHIP CER	50V	1nF
CC509	HCBK102KBA	CHIP CER	50V	1nF
CC511	HCBK102KBA	CHIP CER	50V	1nF
CC512	HCBK102KBA	CHIP CER	50V	1nF
CC513	HCBK102KBA	CHIP CER	50V	1nF
CC514	HCBK104KBA	CHIP CER	50V	100nF
CC515	HCQK470JBA	CHIP CER	50V	47pF
CC516	HCQK470JBA	CHIP CER	50V	47pF
CC517	HCBK104KBA	CHIP CER	50V	100nF
CC518	HCBK104KBA	CHIP CER	50V	100nF
CC521	HCBK104KBA	CHIP CER	50V	100nF
CC522	HCBK104KBA	CHIP CER	50V	100nF
CC523	HCBK104KBA	CHIP CER	50V	100nF
CC524	HCBK102KBA	CHIP CER	50V	1nF
CC526	HCQK220JBA	CHIP CER	50V	22pF
CC527	HCQK220JBA	CHIP CER	50V	22pF
CC528	HCBK102KBA	CHIP CER	50V	1nF
CC549	HCBK104KBA	CHIP CER	50V	100nF
CC550	HCBK104KBA	CHIP CER	50V	100nF
CC551	HCBK104KBA	CHIP CER	50V	100nF
CC552	HCQK270JBA	CHIP CER	50V	27pF
CC553	HCQK270JBA	CHIP CER	50V	27pF
CC556	HCBK102KBA	CHIP CER	50V	1nF
CC560	HCBK102KBA	CHIP CER	50V	1nF
CC561	HCBK104KBA	CHIP CER	50V	100nF
CC567	HCBK102KBA	CHIP CER	50V	1nF
CC568	HCBK104KBA	CHIP CER	50V	100nF
CC569	HCBK102KBA	CHIP CER	50V	1nF
CC570	HCBK104KBA	CHIP CER	50V	100nF
CC578	HCBK561KBA	CHIP CER	50V	560pF
CC579	HCBK561KBA	CHIP CER	50V	560pF
CC589	HCBK561KBA	CHIP CER	50V	560pF
CC601	HCBK472KBA	HIP CERA	50V	4.7nF

Cct Ref	Parts Number	Description		
CC602	HCBK472KBA	HIP CERA	50V	4.7nF
CC617	HCBK104KBA	CHIP CER	50V	100nF
CC620	HCQK309CBA	CHIP CER	50V	3pF
CC621	HCQK309CBA	CHIP CER	50V	3pF
CC622	HCQK680JBA	CHIP CER	50V	68pF
CC629	HCBK104KBA	CHIP CER	50V	100nF
CC631	HCBK104KBA	CHIP CER	50V	100nF
CC635	HCBK104KBA	CHIP CER	50V	100nF
CC665	HCBK222KBA	CHIP CER	50V	2.2nF
CC667	HCBK222KBA	CHIP CER	50V	2.2nF
CC680	HCBK102KBA	CHIP CER	50V	1nF
CC701	HCBK103KBA	CHIP CER	50V	10nF
CC709	HCBK104KBA	CHIP CER	50V	100nF
CC710	HCBK104KBA	CHIP CER	50V	100nF
CC711	HCBK104KBA	CHIP CER	50V	100nF
CC712	HCQK151JBA	CHIP CER	50V	150pF
CC713	HCBK104KBA	CHIP CER	50V	100nF
CC715	HCBK104KBA	CHIP CER	50V	100nF
CC716	HCBK103KBA	CHIP CER	50V	10nF
CC720	HCBK103KBA	CHIP CER	50V	10nF
CC726	HCQK330JBA	CHIP CER	50V	33pF
CC727	HCQK330JBA	CHIP CER	50V	33pF
CC730	HCBK104KBA	CHIP CER	50V	100nF
CC737	HCBK102KBA	CHIP CER	50V	1nF
CC742	HCBK102KBA	CHIP CER	50V	1nF
CC744	HCBK102KBA	CHIP CER	50V	1nF
CC777	HCBK104KBA	CHIP CER	50V	100nF
CCS02	HCBK102KBA	CHIP CER	50V	1nF
CR01	ECEA1CS101	ELECT	16V	100µF
CS01	CMXM2A224J	FILM	100V	0.22µF
CT01	ECQV1J474JMW	FILM	63V	470nF
CT02	ECQV1J474JMW	FILM	63V	470nF
CT03	ECEA1ES470	ELECT	25V	47µF
CT05	ECKC1H103J	CERAMIC	50V	10nF
CT09	ECEA1ES470	ELECT	25V	47µF
CT11	CMXB2A224J	MYLAR	100V	220nF
CT13	ECEA1ES470	ELECT	25V	47µF
CT16	ECEA1H479	ELECT	50V	4.7µF
CT18	ECEA1H479	ELECT	50V	4.7µF
TERMINALS AND LINKS				
JP01	4859117320	AV TERMINAL		
JPA1	4859200401	AV TERMINAL		
JPA2	4859200401	AV TERMINAL		
SCT1	4859303530	SOCKET CRT		⚠
SWITCHES				
SW700	5S50101Z90	SWITCH		
SW701	5S50101Z90	SWITCH		
SW702	5S50101Z90	SWITCH		
SW703	5S50101Z90	SWITCH		
SW704	5S50101Z90	SWITCH		
SW801	ESB92S11B	SWITCH		⚠
RELAYS				
Y801	5SC0101340	RELAY		⚠

DIFFERENCES FOR MODEL TX--32E50D

EXPLODED VIEW				
16	W76QEN693X17	C.R.T.		⚠
17	PTCPMSV32P1D	CRT P.C.B.		⚠
18	PTMP32E50D	MAIN P.C.B.		⚠
19	DMP4532800	MODEL LABEL		
INSTRUCTION BOOKS				
.	TQB0E0244A-M	GERMAN		
I.C.s				
I701	SDA5532E50D	IC MICOM OTP		
I702	X24C32E50D	IC MEMORY		
COILS				
L401	TRL-5R0D	COIL H-LINEARITY		
RESISTORS				
R921	RD-2Z561J	CARBON	0.5W 5%	560 Ω
R922	RD-2Z561J	CARBON	0.5W 5%	560 Ω
R923	RD-2Z561J	CARBON	0.5W 5%	560 Ω
CAPACITORS				
C404	CMYH3C113J	MYLAR	1.6KV	11nF
TERMINALS AND LINKS				
P902	4859205620	CONNECTOR		

DIFFERENCES FOR MODEL TX--32PS12D

EXPLODED VIEW				
16	W76QEN693X17	C.R.T.		⚠
17	PTCPMSV32P1F	CRT P.C.B.		⚠
18	PTMP32PS12D	MAIN P.C.B.		⚠
19	DMP4531300	MODEL LABEL		
INSTRUCTION BOOKS				
.	TQB0E0239A-M	GERMAN		
.	TQB0E0239B-M	DUTCH		
.	TQB0E0239C-M	ITALIAN		
.	TQB0E0239D-M	FRENCH		
I.C.s				
I701	SDA5532PS12D	IC MICOM OTP		
I702	X24C32PS12D	IC MEMORY		
COILS				
L401	TRL-5R0D	COIL H-LINEARITY		
RESISTORS				
R921	ERDS1TJ102	CARBON	0.5W 5%	1K Ω
R922	ERDS1TJ102	CARBON	0.5W 5%	1K Ω
R923	ERDS1TJ102	CARBON	0.5W 5%	1K Ω
CAPACITORS				
C404	CMYH3C113J	MYLAR	1.6KV	11nF
TERMINALS AND LINKS				
P902	4859205620	CONNECTOR		

DIFFERENCES FOR MODEL TX--32PS12F

EXPLODED VIEW				
16	W76QEN693X17	C.R.T.		⚠
17	PTCPMSV32P1F	CRT P.C.B.		⚠
18	PTMP32PS12F	MAIN P.C.B.		⚠
19	DMP4531400	MODEL LABEL		
INSTRUCTION BOOKS				
.	TQB0E0240D-M	FRENCH		
.	TQB0E0240E-M	SPANISH		
.	TQB0E0240F-M	SWEDISH		
.	TQB0E0240G-M	NORWEGIAN		
.	TQB0E0240H-M	FINNISH		
.	TQB0E0240K-M	DANISH		
I.C.s				
I701	SDA5532PS12F	IC MICOM OTP		
I702	X24C32PS12F	IC MEMORY		
COILS				
L401	TRL-5R0D	COIL H-LINEARITY		

Cct Ref	Parts Number	Description			
RESISTORS					
R921	ERDS1TJ102	CARBON	0.5W	5%	1K Ω
R922	ERDS1TJ102	CARBON	0.5W	5%	1K Ω
R923	ERDS1TJ102	CARBON	0.5W	5%	1K Ω
CAPACITORS					
C404	CMYH3C113J	MYLAR	1.6KV		11nF
TERMINALS AND LINKS					
P902	4859205620	CONNECTOR			

DIFFERENCES FOR MODEL TX--32PS12P

EXPLODED VIEW			
16	W76MAF185X72	C.R.T.	⚠
17	PTCPMSV32P1M	CRT P.C.B.	⚠
18	PTMP32PS12P	MAIN P.C.B.	⚠
19	DMP4530500	MODEL LABEL	
INSTRUCTION BOOKS			
.	TQB0E0241M-M	BULGARIAN	
.	TQB0E0241N-M	ROMANIAN	
.	TQB0E0241P-M	POLISH	
.	TQB0E0241Q-M	HUNGARIAN	
.	TQB0E0241R-M	CZECH	
.	TQB0E0241U-M	ENGLISH	
.	TQB0E0241W-M	SLOVAKIAN	
I.C.s			
I701	SDA5532PS12P	IC MICOM OTP	
I702	X24C32PS12P	IC MEMORY	
COILS			
L401	TRL-6R3D	COIL H-LINEARITY	

Cct Ref	Parts Number	Description			
RESISTORS					
R921	ERDS1TJ102	CARBON	0.5W	5%	1K Ω
R922	ERDS1TJ102	CARBON	0.5W	5%	1K Ω
R923	ERDS1TJ102	CARBON	0.5W	5%	1K Ω
CAPACITORS					
C404	CMYH3C103J	MYLAR	1.6K		10nF
TERMINALS AND LINKS					
P902	97P62A09A3	CONNECTOR			

Cct Ref	Parts Number	Description

SCHEMATIC DIAGRAMS FOR MODELS TX-32E50D, TX-32PS12D, TX-32PS12F, TX-32PS12P (CP-830FP CHASSIS)

IMPORTANT SAFETY NOTICE
Components identified by ⚠ mark have special characteristics important for safety.
When replacing any of these components, use only manufacturers' specified parts.

NOTE

1. RESISTOR
   All resistors are carbon ¼W resistor, unless marked otherwise.
   Unit of resistance is OHM (Ω) (k=1,000, M=1,000,000)
2. CAPACITORS
   All capacitors are ceramic 50V unless marked otherwise.
   Unit of capacitance is μF unless otherwise stated.
3. COIL
   Unit of inductance is μH, unless otherwise stated.
4. EARTH SYMBOL

   Chassis Earth (Cold)

   Line Earth (Hot)

5. VOLTAGE MEASUREMENT
   Voltage is measured by a d.c. voltmeter.
   Measurement conditions are as follows:

Power source	a.c. 220V-240V, 50Hz
Receiving Signal	Colour Bar signal (RF)
All customer controls	Maximum position

These schematic diagrams are the latest at time of printing and are subject to change without notice.

REMARKS

a. Do not touch the hot part, or the hot and cold parts at the same time, as you are liable to a shock hazard.

b. Do not short circuit the hot and cold circuits as electrical components may be damaged.

c. Do not connect an instrument, such as an oscilloscope, to the hot and cold circuits simultaneously as this may cause fuse failure. Connect the earth of the instruments to the earth connection of the circuit being measured.

d. Make sure to disconnect the power plug before removing the chassis.

NOTE

1. The Power Supply Circuit contains a circuit area, which uses a separate power supply to isolate the earth connection. The circuit is defined by HOT and COLD indications in the schematic diagram. All circuits, except the Power Circuit, are COLD.

DIFFERENCE LIST(MAIN-BOARD)

MODEL / Cct Ref	TX-32PS12D TX-32PS12F	TX-32PS12P	TX-32E50D
	PTMPM6V2P1PS	PTCPM3V2P1PM	PTMPM6V3P1DS
L401	58H0000085	58H0000074	58H0000085
C404	CMYI3C113J	CMYI3C103J	CMYI3C113J

MAIN-BOARD ⚠

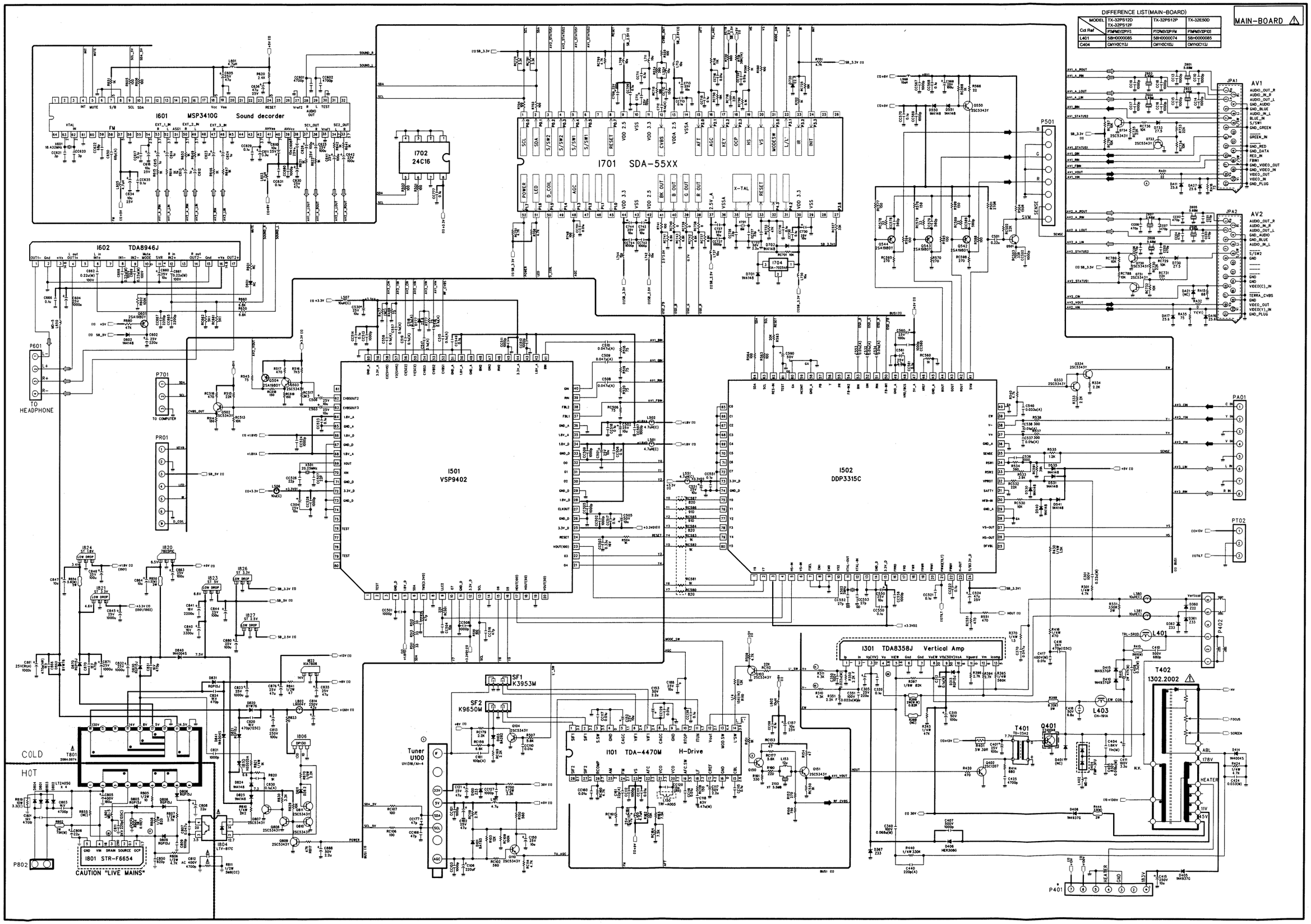

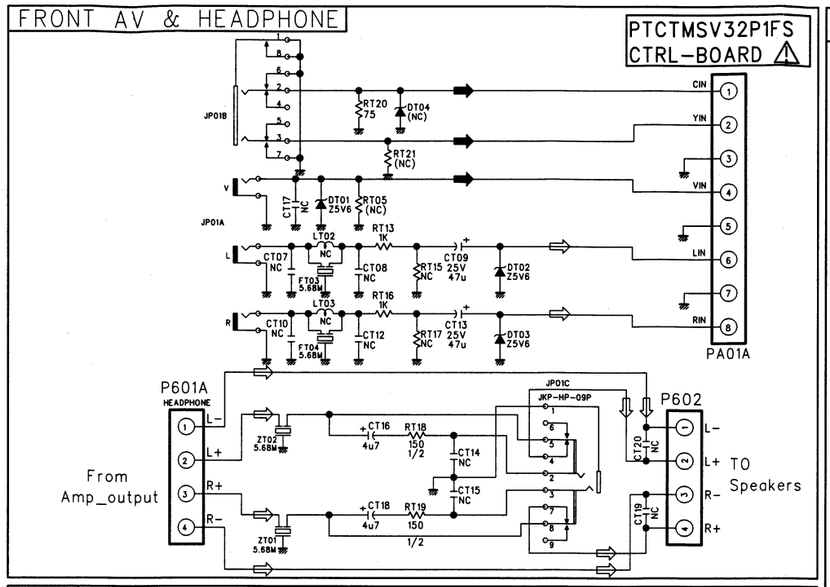

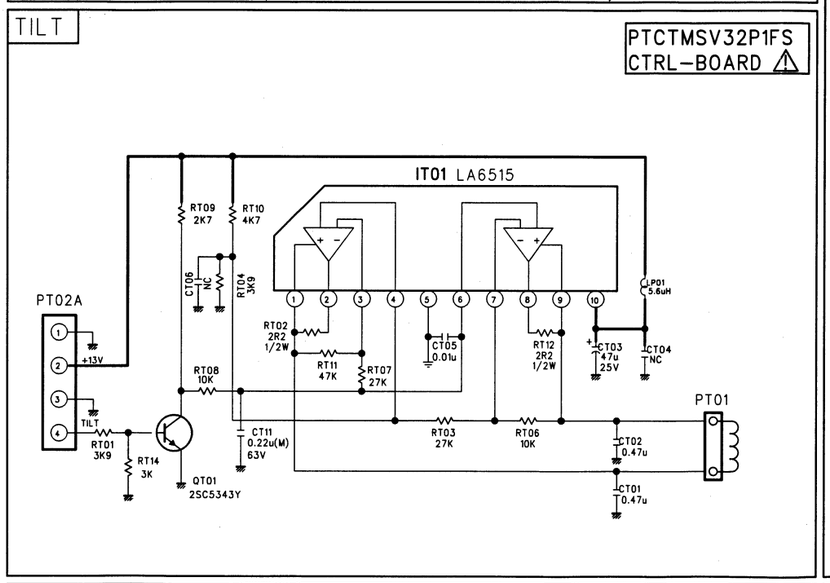

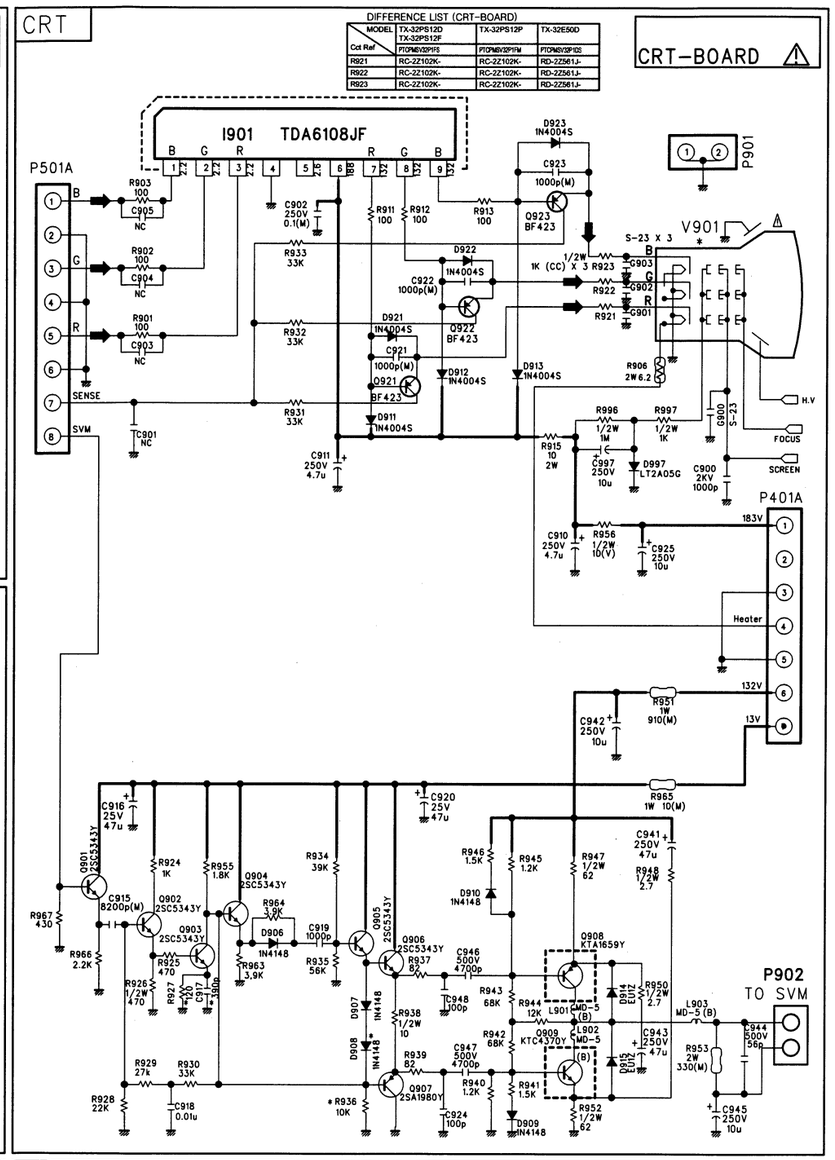

DIFFERENCE LIST (CRT-BOARD)

MODEL / Cct Ref	TX-32PS12D TX-32PS12F	TX-32PS12P	TX-32E50D
	FTCMSV32P1FS	FTCNSV32P1W	FTCNSV32P1G
R921	RC-2Z102K-	RC-2Z102K-	RD-2Z561J-
R922	RC-2Z102K-	RC-2Z102K-	RD-2Z561J-
R923	RC-2Z102K-	RC-2Z102K-	RD-2Z561J-

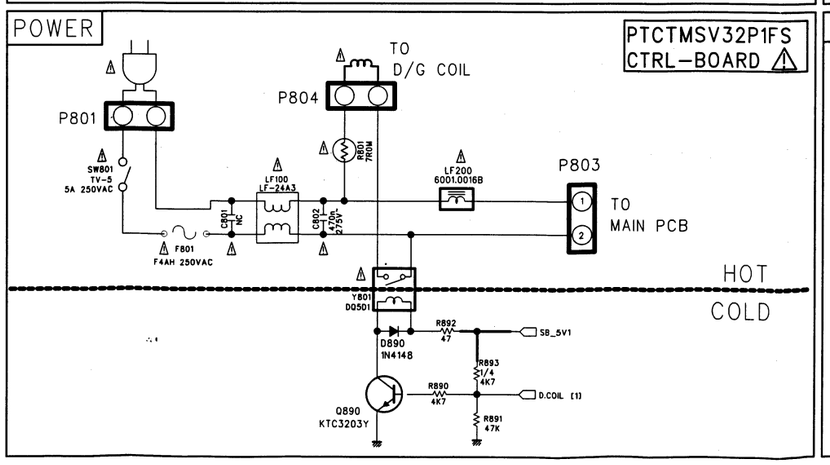

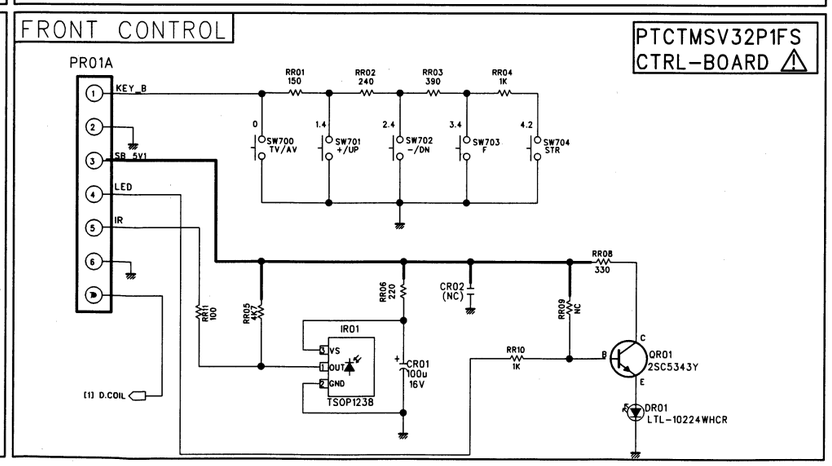

CONDUCTOR VIEWS FOR MODELS
TX-32E50D, TX-32PS12D, TX-32PS12F, TX-32PS12P
MAIN-BOARD

MODEL	TX-32PS12D TX-32PS12F	TX-32PS12P	TX-32E50D
BOARD DESCRIPTION	PTMPMSV32P1FS	PTMPMSV32P1FM	PTMPMSV32P1DS

TRAN'S		D103	B1	D830	C6
Q103	B1	D313	A5	D831	C6
Q104	B1	D360	B6	D840	C5
Q110	A1	D361	A6	D841	C5
Q150	B2	D362	A5	D860	D5
Q151	B2	D367	A5	D870	C6
Q333	B4	D404	B7	IC'S	
Q334	B4	D405	A6	I101	B1
Q401	C7	D406	A5	I301	B4
Q402	C5	D408	A6	I501	C2
Q502	C1	D410	B5	I502	D2
Q503	A1	D414	A6	I601	B3
Q504	A1	D415	B5	I602	C4
Q542	E2	D720	E4	I701	E3
Q543	E2	D730	D3	I702	D3
Q544	E2	D733	D3	I704	E2
Q550	E1	D777	C3	I801	E6
Q601	D4	D801	E7	I804	E5
Q730	E3	D802	E7	I806	D5
Q731	D4	D803	E7	I810	C6
Q733	D3	D804	E7	I820	C4
Q734	D3	D805	E6	I821	D5
Q807	E5	D806	E5	I822	C4
Q808	E5	D808	D6	I823	E5
Q809	E5	D809	D6	I824	D5
Q810	E5	D811	E5	I826	E4
Q811	E5	D820	C7	I827	E4
DIODES		D821	C7		
D100	B4	D824	C6		
D101	A1	D825	C5		

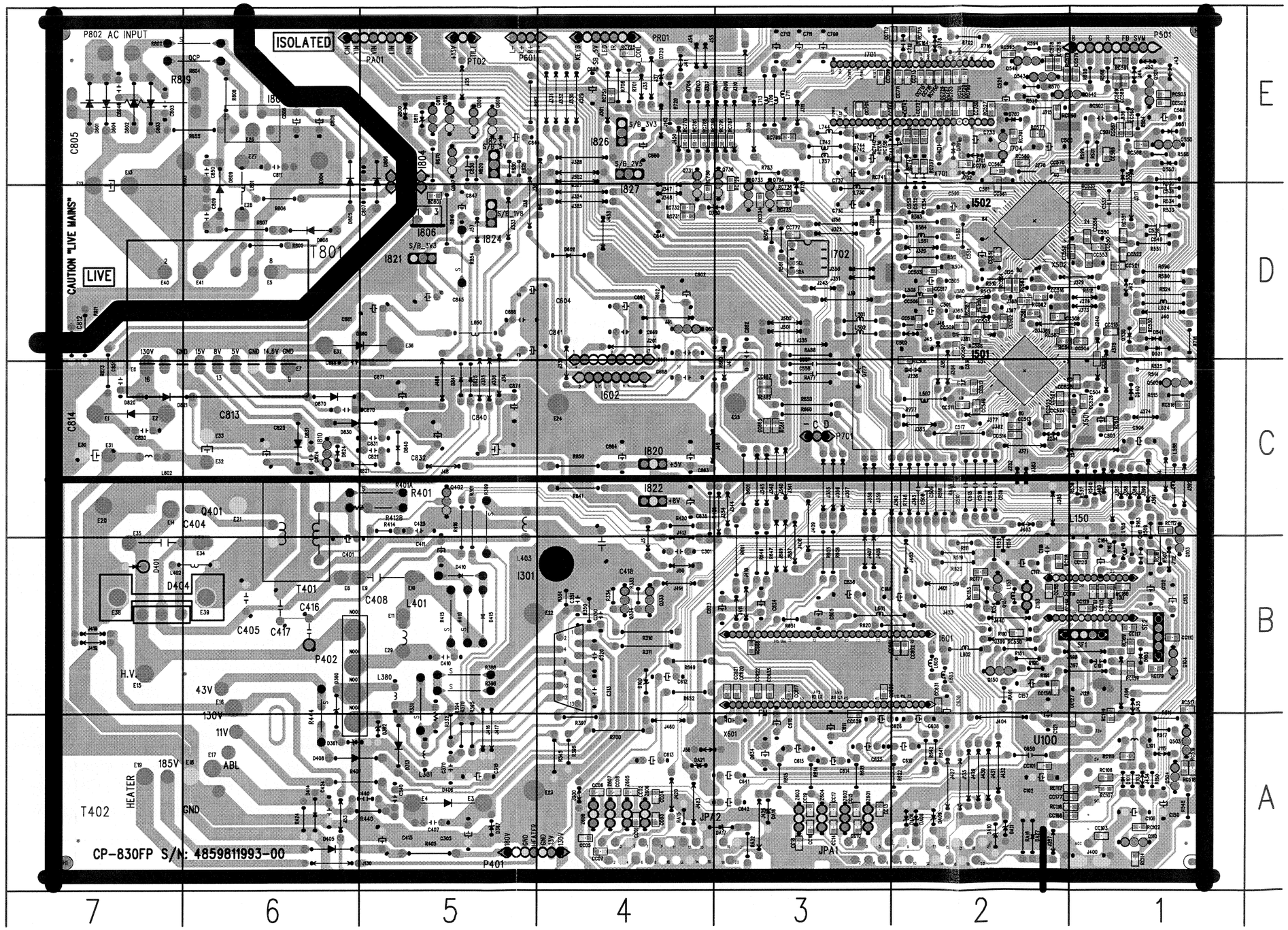

CTRL-BOARD PTCTMSV32P1FS

TRAN'S	
Q890	B4
QR01	C4
QT01	A3
DIODES	
D890	B4
DT01	C1
DT02	B1
DT03	B1
IC'S	
IR01	C4
IT01	B3

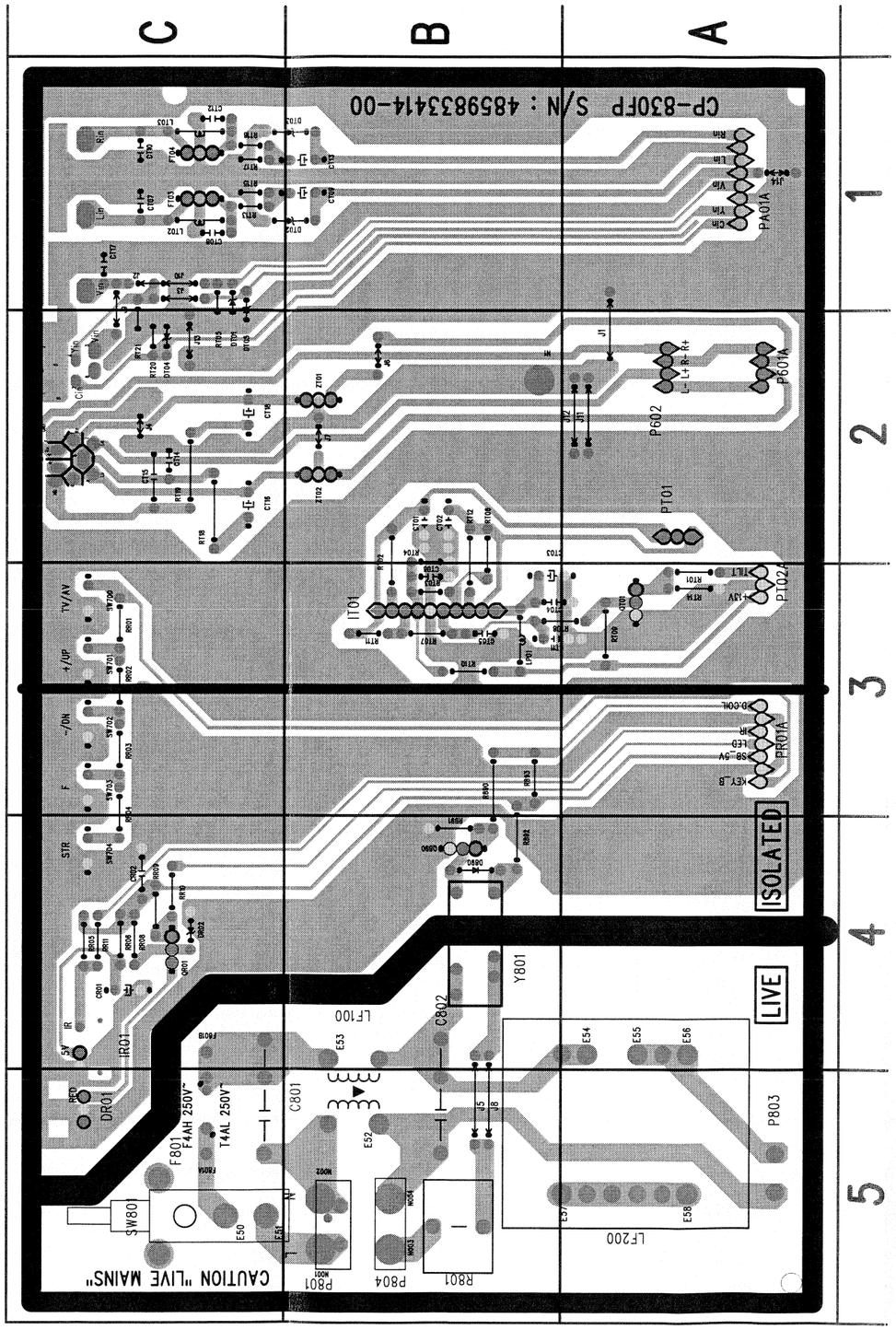

CRT-BOARD

TRAN'S		D907	C2
Q901	C2	D908	C2
Q902	C1	D911	B4
Q903	C2	D912	B4
Q904	B1	D913	B4
Q905	C1	D915	B1
Q907	B1	D921	C4
Q908	C1	D922	B4
Q909	A1	D923	B4
Q921	C4	D997	A3
Q922	B4		
Q923	B4	IC'S	
		I901	A4
DIODES			
D906	B1		

MODEL	TX-32PS12D TX-32PS12F	TX-32PS12P	TX-32E50D
BOARD DESCRIPTION	PTCPMSV32P1FS	PTCPMSV32P1FM	PTCPMSV32P1DS